Measuring & monitoring systems
Solutions for smart machines, factories & grids

Version 2022

Weidmüller

Orange Selection
Quick and easy planning

As a planning engineer, do you want to select products easily and receive them quickly? From a partner you can rely on? Then plan with the Orange Selection from Weidmüller in the future. The Orange Selection items are always available, carefully selected and the portfolio consists of more than 1,500 items to fully cover your standard needs.

If your order is placed before 3:00 pm, we guarantee that your order will be on its way the very next working day.

For even more efficient planning and production processes, we will of course provide all articles in digital form. CAD, ETIM and eClass data are available in our online product catalogue **catalog.weidmueller.com**

We have summarised all the advantages of the Orange Selection on our website.

Check it out: **www.weidmueller.com/orange-selection**

Measuring & monitoring systems

Hardware	Introduction	
	Energy Meter	
	Energy Analyser	
	Energy Logger	
	Current transformer	
	Retrofit energy solutions	
	Sensors - u-sense	
	A comprehensive automation portfolio	
Software	Energy management software	
	A comprehensive software portfolio	
Applications	Applications in practice	
Appendix	**Service and support**	
	Index	Index Type / Index Order No. Addresses worldwide

Hardware

Energy Meter - BasicLine

Page B.2

- Measurement of the basic electrical signals of an AC system
- Direct current measurement up to 100 A
- IEC 62053-21

Energy Meter - ValueLine

Page B.10

- Detailed measurement of energy consumption
- Voltage, current, power and energy visible at a glance
- High scalability

Energy Analyser

Page C.2

- Integrated residual current monitoring
- Measurement according to common standards EN 50160, IEEE 519 or IEC 61000-2-4
- DIN rail devices for basic requirements

Energy Logger

Page D.2

- Integrated temperature measurement
- Integrated Modbus interface
- Data memory up to 32 MB

Current Transformers

Page E.2

- Galvanically isolate primary and secondary circuit from each other
- Measuring in different measuring environments

Rogowski-Coil

Page E.18

- Universal measuring and monitoring solution
- Easy configuration & status request
- DIN mounting possible

Retrofit-Solutions

Plug&Play Boxes

Page F.4

- Integrated device memory
- Retrofit solution with IP54 protection class
- Data recording and display via ecoExplorer go

Connectivity-Boxes

Page F.8

- Flexible choice of measuring devices
- Retrofit solution in protection class IP65
- High-quality and prefabricated housing

Sensors

u-sense vibration

Page G.2

- Retrofit solution for machine monitoring
- Analyze acceleration data (time and frequency)
- IP66 and Ex approved

u-sense energy drives

Page G.8

- Retrofit solution that can be installed quickly
- Data acquisition for motors with star and star-delta operation
- Additional inputs for analog and digital sensors

Comprehensive automation portfolio

I/O System - u-remote

Page H.4

- Modular I/O system
- Protection class IP20
- Various modules & fieldbus couplers

Controls - u-control

Page H.12

- Dual-Core CPU
- 512 Mbyte RAM
- Integrated software u-OS

Web-Panels - u-view

Page H.18

- Resitive & Multi-Touch
- Sizes from 4" - 15,6" available
- Different case types / different designs

Industrial PCs - u-view

Page H.20

- Optimized design for every performance class
- From Intel Atom to Intel Core i7
- Passively cooled
- Latest SSD technology

IoT-Gateway

Page H.22

- Versatile IT integration
- Flexible IoT integration through various interfaces
- Integrated remote access

Software

ecoExplorer go

Page I.4

- Collect and display measurement data
- Simple commissioning
- Quick insight for efficient energy management

ResMa

Page I.6

- Process & Energy Optimization
- Easy connectivity
- Certified according to ISO 50001

Comprehensive software portfolio

u-create PROCON WEB

Page J.2

- Visualization software
- Embedded and SCADA variant available
- Web visualization

u-link - Remote Access

Page J.8

- Low configuration effort
- Individual system management
- Secure remote access and fault diagnosis

Industrial Analytics - Auto ML

Page J.10

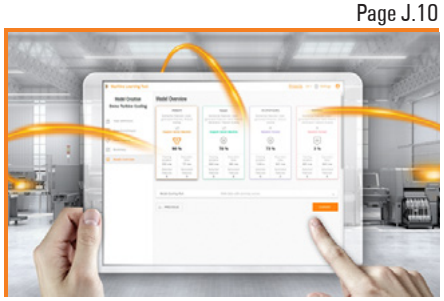

- End-to-end solution
- Simple machine learning
- Build new business models

Introduction

Introduction	Industrial IoT with measuring and monitoring systems	A.2
	Total Energy Monitoring	A.4

Industrial IoT with measuring and monitoring systems

The way to Industrial IoT does not have to be complicated. No matter whether access to valuable data is required or if new, data-related services are to be generated, Weidmüller offers components and services for easy access to the Industrial IoT.

With the comprehensive, future-oriented and coordinated IoT-capable portfolio, the path to the Industrial IoT can be a successful one – „from data to value" – both for greenfield and brownfield applications. The solutions from the areas of data acquisition, data pre-processing and data communication form the infrastructure on which the logical linking and evaluation of the collected information – the data analysis – is based.

One thing is clear: digitalisation is not an end in itself. The added value is exploited in the specific use case, whether this is the collection of process data, energy management, ensuring availability with condition monitoring or deploying service technicians more efficiently thanks to remote maintenance. And last but not least, new business models can be created by using artificial intelligence without having to be a data scientist – Weidmüller is designing the digital transformation both with and for the user: it's simple and efficient.

Industrial Internet of Things (IIoT) is increasingly permeating the production

- **Interconnection of 15 billion communication-capable machines**
- **Components of the advancing automation and digitalization process**
- **Predictive Maintenance and Energy Monitoring**

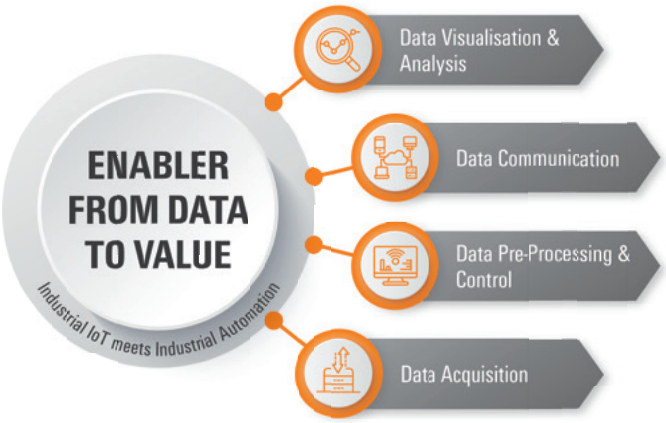

Industrial IoT, Data Acquisition & Energy Management
Product Portfolio

Holistic Offering for Industrial Data Acquisition

Software Solutions
- ResMa® – Resource Manager
- u-create visu / PROCON WEB

Communication
- IoT Gateway
- ResMa® connectors

Automation
- u-control and I/O modules
- HMI and Edge-PC
- Engineering tools

Measurement
- Energy Meter and Analyser
- Transformers
- Rogowski System

Data Analysis & Business Logic

Data Communication

Data Preprocessing

Data Acquisition

Engineering & Services

Services
- Measuring concepts
- Application engineering
- Data services

Engineered Products
- Pre-assembled sets
- Plug&Play retrofit boxes

Target Applications

Industrial IoT with measuring and monitoring systems

Energy Monitoring & Management	• Manufacturing companies that want to improve energy efficiency (ISO 50001 – EN 16247-1) • Customers with trouble in grid quality as well as electromagnetic compatibility • Improvement of plant availability by measuring residual currents
Factory Data Acquisition	• Companies that want to improve and monitor their production (processes) as well as their manufacturing environment • Customers with need of condition monitoring or live visualization of production • Automation and integration of different silo applications from different suppliers
Machine Data Acquisition	• Machine builders that want to monitor their machines in the field • Machine integrators willing to improve their maintenance contract and offer new services for their end customers • Data acquisition of different machine types with various PLCs

Maximum energy efficiency and plant availability

Tap new potential with Total Energy Monitoring

Total Energy Monitoring is Weidmüller's holistic modular system for measuring and monitoring the power supply network. Entire manufacturing energy networks can be continuously monitored and analysed in detail – even remotely.

Effectively maximise energy efficiency and plant availability

Climate change and dwindling resources are global megatrends that are increasingly influencing corporate action. It also holds true that if you reduce energy costs, you increase profitability. In addition, high plant availability is playing an increasingly prominent role for ensuring efficient production processes. These factors require a specific package of measurements that is individually tailored for each company.

With Total Energy Monitoring, Weidmüller has developed an equally comprehensive and flexible product range for individual solutions: hardware, software and consultancy services are tailored to fulfil the purpose of the customer-specific Energy Management solution. The concept supports also the international ISO 50001 directive and makes projects easier to plan and realise.

Seamless portfolio for plants of all sizes

Achieve full transparency of your manufacturing energy consumption. Manufacturing energy networks can be fully monitored and analysed from the interconnection point and sub-distribution all the way down to the individual machine modules. You gain a better understanding of the process and more control over your energy costs and machine processes.

The Weidmüller solution supports this optimisation process with software and hardware components which can be used flexibly. They are highly compatible, even when used in collaboration with already installed energy measurement systems and can be easily adjusted to individual application requirements. In short, you can always rely on a seamless production portfolio with optimum quality for all levels of production. The improved availability and efficiency of your entire plant will quickly become noticeable.

GERMAN INNOVATION AWARD '18 WINNER

Expertise and awards

Weidmüller has a long tradition of energy efficiency. During the time between receiving our first award, the ASU Environmental Prize in 1990, and the German Innovation Award in 2018, we have enjoyed decades of pioneering work and development. An outstanding example of accurate energy monitoring is our production location in Detmold, which was awarded the title of a climate protection company in 2013. Implemented with our proprietary components, the hardware in combination with the specialised software provides the best prerequisites for successful energy monitoring.

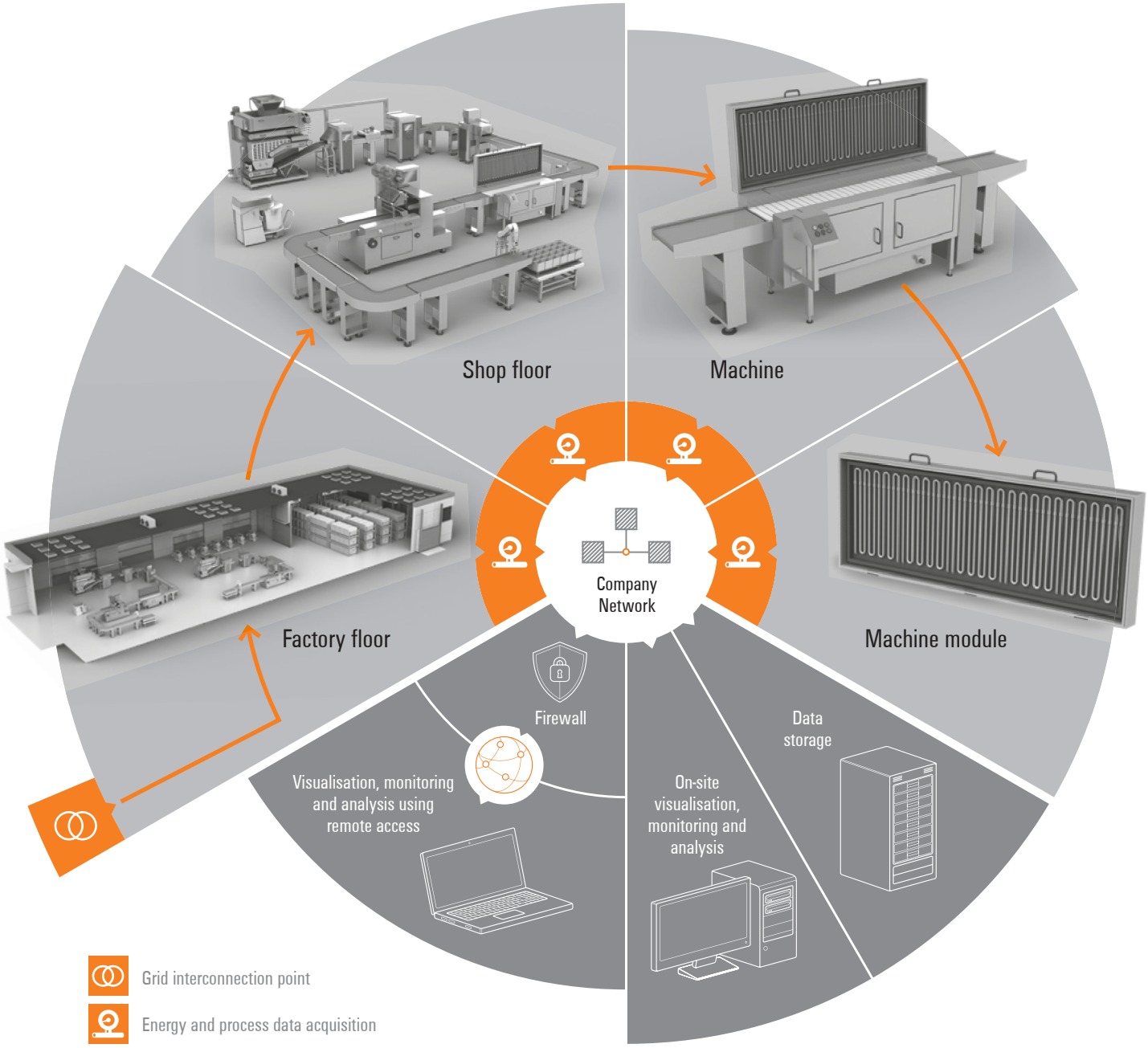

Total Energy Monitoring
for all four levels of production

The Total Energy Monitoring concept ensures consistency from interconnection points in the factory, down the production lines and individual machines and into the heart of the machine processes.

The solution allows you to monitor current and energy measurement data as well as other process data relevant for energy monitoring within your entire concept, such as flow rates, temperatures or pressures. Transferring the measurement data to a central data server allows for immediate access and prompt evaluation using the u-create ResMa® software.

In addition the flexible remote maintenance solution u-link is available which provides the ability to communicate from remote into the machine module level.

Energy Meter

Energy Meter	Introduction BasicLine	B.2
	Selection table	B.4
	Energy Meter – BasicLine	B.6
	Introduction ValueLine	B.10
	Selection table	B.12
	Energy Meter – ValueLine	B.14

Accurate, reliable and cost-effective energy measurement

Universal meters with direct display in a modern design

BasicLine is the measuring device portfolio for the cost-effective acquisition of basic electrical parameters in low-voltage power networks.

The devices will measure and display all the fundamental electrical parameters in a LCD. The portfolio includes devices for one- or three-phase measurement. It is mounted on a DIN rail or in the front panel. Several current measurement versions are available: either for 1A/5A current transformers or for direct current measurement up to 100A. Depending on the version, the measuring devices have an integrated Ethernet or RS485 interface.

Your special advantages:

- Simple and reliable measurement of the basic electrical parameters of an AC system.
- In addition to measurement via current transformers, direct current measurement up to 100A is also possible.
- Bi-directional measurement for kW and kWh.
- Complies to the requirement of class 1 active energy measurement and conforms to IEC 62053-21 standards.

Simple and reliable measurement
Simple and reliable measurement of the basic electrical parameters of an AC system.

Bi-directional measuring for kW and kWh
Bi-directional energy meter for energy and power measurement.

Direct measurement up to 100A
In addition to measurement via 1A/ 5A current transformers, direct current measurement up to 100A is also possible.

Selection table

Type	EM111-RTU-2P	EM110-RTU-2P	EM120-RTU-2P	EM122-RTU-2P	EM220-RTU-4DI2DO
Order No.	7760051001	7760051002	7760051004	7760051003	7760051005
Type of mounting	DIN rail	DIN rail	DIN rail	DIN rail	Front panel mounting
Display	LCD	LCD	LCD	LCD	LCD round diagram
Technical Characteristics					
Measuring range, Voltage L-N, AC (without transducer)	176...276 V	176...276 V	138...276 V	138...276 V	50...345 V
Measuring range, Voltage L-L, AC (without transducer)			240...480 V	240...480 V	50...600 V
Overvoltage category	CAT II	CAT II	CAT III	CAT III	CAT III
Power supply voltage	176...276 V	176...276 V	85...275 V AC	138...276 V	75...270 V
Two wire	•	•	-	-	-
Three wire	-	-	•	•	•
Four wire	-	-	•	•	•
Measurement accuracy for active energy (kWh, .../5 A)	Class 1	Class 1	Class 0.5	Class 0.5	Class 0.5
Measuring accuracy for voltage	0.5 %	0.5 %	0.5 %	0.5 %	0.2 %
Measuring accuracy for current	0.5 %	0.5 %	0.5 %	0.5 %	0.2 %
Number of digital inputs	-	-	-	-	4
Number of digital outputs	-	-	-	-	2
Number of pulse outputs	2	2	2	2	
Current measurement channel	1	1	3	3	3
Interfaces					
RS485	•	•	•	•	•
Ethernet	-	-	-	-	-
Protocols					
Modbus RTU	•	•	•	•	•
Modbus-Gateway	-	-	-	-	-

	EM220-RTU-4DI2DO-GW
	7760051006
	Front panel mounting
	LCD round diagram
	50...345 V
	50...600 V
	CAT III
	75...270 V
	-
	•
	•
	Class 0.5
	0.2 %
	0.2 %
	4
	2
	3
	•
	•
	•
	•

Energy meters for DIN rail mounting

EM110-RTU-2P

EM111-RTU-2P

Technical data

	EM110-RTU-2P	EM111-RTU-2P
Measurement range, voltage L-N, AC	176...276 V	176...276 V
Measurement range, voltage L-L, AC		
Surge voltage category	II	II
Voltage supply		
Three-wire system		
Four-wire system		
Measuring accuracy for voltage	0.5 %	0.5 %
Measuring accuracy for current	0.5 %	0.5 %
Measurement accuracy for active energy (kWh, .../5 A)	Class 1 (IEC 62053-21), Class B (EN 50470-3)	Class 1 (IEC 62053-21), Class B (EN 50470-3)
Number of digital inputs		
Number of digital outputs		
Number of pulse outputs	2	2
Current-measuring channels	1	1
Interface	RS485	RS485
Protocol	Modbus RTU	Modbus RTU
Note		

Ordering data

Type	Qty.	Order No.
EM110-RTU-2P	1	**7760051002**
Note		

Type	Qty.	Order No.
EM111-RTU-2P	1	**7760051001**

Energy meters for DIN rail mounting

EM120-RTU-2P

EM122-RTU-2P

Technical data

	EM120-RTU-2P	EM122-RTU-2P
Measurement range, voltage L-N, AC	138...276 V	138...276 V
Measurement range, voltage L-L, AC	240...480 V	240...480 V
Surge voltage category	III	III
Voltage supply	85...275 V AC	
Three-wire system	Yes	Yes
Four-wire system	Yes	Yes
Measuring accuracy for voltage	0.5 %	0.5 %
Measuring accuracy for current	0.5 %	0.5 %
Measurement accuracy for active energy (kWh, .../5 A)	Class 0.5	Class 0.5
Number of digital inputs		
Number of digital outputs		
Number of pulse outputs	2	2
Current-measuring channels	3	3
Interface	RS485	RS485
Protocol	Modbus RTU	Modbus RTU
Note		

Ordering data

	Type	Qty.	Order No.	Type	Qty.	Order No.
	EM120-RTU-2P	1	**7760051004**	EM122-RTU-2P	1	**7760051003**
Note						

Energy meters for front panel mounting

	EM220-RTU-4DI2DO	EM220-RTU-4DI2DO-GW

Technical data

Measurement range, voltage L-N, AC	50...345 V	50...345 V
Measurement range, voltage L-L, AC	50...600 V	50...600 V
Surge voltage category	III	III
Voltage supply	75...270 V AC, 100...380 V DC	75...270 V AC, 100...380 V DC
Three-wire system	Yes	Yes
Four-wire system	Yes	Yes
Measuring accuracy for voltage	0.5 %	0.5 %
Measuring accuracy for current	0.5 %	0.5 %
Measurement accuracy for active energy (kWh, .../5 A)	Class 0.5S (IEC 62053-22), Class 0.5 (IEC 61557-12)	Class 0.5S (IEC 62053-22), Class 0.5 (IEC 61557-12)
Number of digital inputs	4	4
Number of digital outputs	2	2
Number of pulse outputs		
Current-measuring channels	3	3
Interface	RS485	RS485, Ethernet
Protocol	Modbus RTU	Modbus RTU, Modbus/TCP (Port 502), Modbus-Gateway
Note		

Ordering data

Type	Qty.	Order No.
EM220-RTU-4DI2DO	1	**7760051005**
Note		

Type	Qty.	Order No.
EM220-RTU-4DI2DO-GW	1	**7760051006**

Measuring energy consumption of production plants in detail

Weidmüller energy measuring devices make energy efficiency transparent

Energy networks of industrial plants are complex. Our ValueLine energy meters make it possible to divide them into manageable areas for convenient analysis of consumption and other energy parameters. Many companies want to conserve energy sources, use energy more efficiently and maximize the availability of energy networks.

This not only shows a sense of responsibility but is also recommended for economic reasons. Weidmüller energy measuring devices can do much more than just measure the consumption of electrical energy. Among other things, they are also suitable for determining basic parameters for energy quality or for analyzing the currents of all conductors individually and differentially - like our Energy Meter 750.

This gives you a quick overview of how the electrical energy in your production facility is doing. This applies both in terms of efficient use as well as quality, stability and availability.

But not every measuring device is suitable for every application. You can select the adequate measuring device for each of your plant components from our comprehensive, modular device portfolio.

Measurement data at a glance
In devices with integrated display, the essential measurement data such as voltage, current, power and energy can be conveniently read off immediately

High scalability
Thanks to the extensive range of energy measuring devices, you can divide the energy networks of your production sites as precisely as you like and carry out detailed measurements per area

Selection table

Type	EM D370-CBM	EM D650	EM 520		EM 525		
			24	230	24	230	
Order No.	2540830000	2425490000	2500860000	2500880000	2540880000	2540890000	
Type of mounting	DIN rail	DIN rail	Front panel mounting		Front panel mounting		
Display	LCD	LCD	LCD		LCD		
Technical Characteristics							
Measuring range, Voltage L-N, AC (without transducer)	277 V	277 V	277 V		277 V		
Measuring range, Voltage L-L, AC (without transducer)	480 V	480 V	480 V		480 V		
Overvoltage category	300 V CAT III	300 V CAT III	300 V CAT III		300 V CAT III		
Power supply voltage	-	95 - 240 V AC; 135 - 340 V DC	24 - 90 V AC; 24 - 90 V DC	90 - 277 V AC; 90 - 250 V DC	24 - 90 V AC; 24 - 90 V DC	90 - 277 V AC; 90 - 250 V DC	
Three wire	-	•	•		•		
Four wire	•	•	•		•		
Sampling frequency 50/60 Hz	5.4 kHz	20 kHz	21.33 / 25.6 kHz		21.33 / 25.6 kHz		
Measurement points per second	5,400	20,000	21,330 / 25,600		21,330 / 25,600		
Measurement results per second	5	5	5		5		
Measuring accuracy for voltage	0.20 %	0.20 %	0.20 %		0.20 %		
Measuring accuracy for current	0.20 %	0.25 %	0.20 %		0.20 %		
Number of digital inputs	-	2	-		-		
Number of digital outputs	-	2	2		-		
Number of pulse outputs	-	2	2		-		
Current measurement channel	3	4	3		3		
Temperature input	-	1	-		-		
Memory size	4 MB Flash	4 MB Flash	-		-		
Number of memory values	160 k	156 k	-		-		
Interfaces							
RS232	-	•	-		-		
RS485	•	•	•		-		
USB	-	-	-		-		
Profibus DP	-	-	-		-		
M-Bus	-	-	-		-		
Ethernet	-	-	-		•		
Webserver / E-Mail	-	-	-		-		
Protocols							
Modbus RTU	•	•	•		-		
Modbus-Gateway	-	-	-		-		
Profibus DP V0	-	-	-		-		
Modbus TCP/IP, Modbus RTU over Ethernet, SNMP	-	-	-		•		
BACnet (optional)	-	-	-		-		
Profinet	-	-	-		-		

	EM 610		EM 610 PB		EM 750		EM 700 PN	
	24	230	24	230	24	230	24	230
	2540920000	2540850000	2540860000	2540870000	2540900000	2540910000	2500870000	2500890000
	Front panel mounting		Front panel mounting		Front panel mounting		Front panel mounting	
	LCD		LCD		LCD		LCD	
	277 V		277 V		277 V		277 V	
	480 V		480 V		480 V		480 V	
	300 V CAT III		300 V CAT III		300 V CAT III		300 V CAT III	
	24 - 90 V AC; 24 - 90 V DC	90 - 277 V AC; 90 - 250 V DC	24 - 90 V AC; 24 - 90 V DC	90 - 277 V AC; 90 - 250 V DC	24 - 90 V AC; 24 - 90 V DC	90 - 277 V AC; 90 - 250 V DC	24 - 90 V AC; 24 - 90 V DC	90 - 277 V AC; 90 - 250 V DC
	•		•		•		•	
	•		•		•		•	
	21.33 / 25.6 kHz		21.33 / 25.6 kHz		21.33 / 25.6 kHz		21.33 / 25.6 kHz	
	21,330 / 25,600		21,330 / 25,600		21,330 / 25,600		21,330 / 25,600	
	5		5		5		5	
	0.20 %		0.20 %		0.20 %		0.20 %	
	0.20 %		0.20 %		0.20 %		0.20 %	
	4		4		3		3	
	6		6		5		5	
	6		6		5		5	
	4		4		4+2		4+2	
	-		-		2		2	
	256 MB		256 MB		256 MB		-	
	10.000 k		10.000 k		10.000 k		-	
	-		-		-		-	
	•		•		•		•	
	•		•		-		-	
	-		•		-		-	
	-		-		-		-	
	-		-		•		•	
	-		-		• / •		• / -	
	•		•		•		•	
	-		-		•		-	
	-		•		-		-	
	-		-		•		•	
	-		-		•		-	
	-		-		-		•	

Energy meters for DIN rail mounting

Energy Meter 370-CBM

Technical data

Measurement range, voltage L-N, AC	277 V
Measurement range, voltage L-L, AC	480 V
Surge voltage category	300 V CAT III
Voltage supply	
Three-wire system	No
Four-wire system	Yes
Quadrants	4
Sampling frequency 50/60 Hz	5.4 kHz
Continuous measurements	Yes
Effective value from the period (50/60 Hz)	10 / 12
Measurement result per second	5
Residual current measuring	No
Harmonics, per order / voltage	1.-25., odd
Harmonics, per order / current	1.-25., odd
Unbalanced	No
Positive, negative and zero system	Yes
Measuring accuracy for voltage	0.2 %
Measuring accuracy for current	0.2 %
Measurement accuracy for active energy (kWh, .../5 A)	Class 0.5S
Number of digital inputs	
Number of digital outputs	
Number of pulse outputs	
Current-measuring channels	3
Temperature input	No
Memory; minimum and maximum values	Yes
Memory size	4 MB
Interface	RS485: 9,6 – 115,2 kbps
Protocol	Modbus RTU
Note	

Ordering data

Type	Qty.	Order No.
ENERGY METER D370-CBM	1	**2540830000**

Note

Energy meters for front panel mounting

Energy Meter 520-24

Energy Meter 520-230

Technical data

	Energy Meter 520-24	Energy Meter 520-230
Measurement range, voltage L-N, AC	277 V	277 V
Measurement range, voltage L-L, AC	480 V	480 V
Surge voltage category	300 V CAT III	300 V CAT III
Voltage supply	24 - 90 V AC (50/60 Hz), 24 - 90 V DC	90 - 277 V AC (50/60 Hz), 90 - 250 V DC
Three-wire system	Yes	Yes
Four-wire system	Yes	Yes
Quadrants	4	4
Sampling frequency 50/60 Hz	25.6 kHz	25.6 kHz
Continuous measurements	Yes	Yes
Effective value from the period (50/60 Hz)	10 / 12	10 / 12
Measurement result per second	5	5
Residual current measuring	No	No
Harmonics, per order / voltage	1.-40.	1.-40.
Harmonics, per order / current	1.-40.	1.-40.
Unbalanced	No	No
Positive, negative and zero system	Yes	Yes
Measuring accuracy for voltage	0.2 %	0.2 %
Measuring accuracy for current	0.2 %	0.2 %
Measurement accuracy for active energy (kWh, .../5 A)	Class 0.5S	Class 0.5S
Number of digital inputs		
Number of digital outputs	2	2
Number of pulse outputs	2	2
Current-measuring channels	3	3
Temperature input	No	No
Memory; minimum and maximum values	Yes	Yes
Memory size		
Interface	RS485: 9,6 – 115,2 kbps	RS485: 9,6 – 115,2 kbps
Protocol	Modbus RTU	Modbus RTU
Note		

Ordering data

Type	Qty.	Order No.
ENERGY METER 520-24	1	**2500860000**

Type	Qty.	Order No.
ENERGY METER 520-230	1	**2500880000**

Note

Accessories

	Qty.	Order No.
DIN rail adapters	ENERGY METER BRACKET S2	1	**2433070000**
Seal	ENERGY METER SEAL L96-2	1	**2495610000**
Fixing clamps	ENERGY METER FIXING SET	1	**2433030000**

	Qty.	Order No.
ENERGY METER BRACKET S2	1	**2433070000**
ENERGY METER SEAL L96-2	1	**2495610000**
ENERGY METER FIXING SET	1	**2433030000**

Note

Energy meters for front panel mounting

Energy Meter 525-24

Energy Meter 525-230

Technical data

	Energy Meter 525-24	Energy Meter 525-230
Measurement range, voltage L-N, AC	277 V	277 V
Measurement range, voltage L-L, AC	480 V	480 V
Surge voltage category	300 V CAT III	300 V CAT III
Voltage supply	24 - 90 V AC (50/60 Hz), 24 - 90 V DC	90 - 277 V AC (50/60 Hz), 90 - 250 V DC
Three-wire system	Yes	Yes
Four-wire system	Yes	Yes
Quadrants	4	4
Sampling frequency 50/60 Hz	25.6 kHz	25.6 kHz
Continuous measurements	Yes	Yes
Effective value from the period (50/60 Hz)	10 / 12	10 / 12
Measurement result per second	5	5
Residual current measuring	No	No
Harmonics, per order / voltage	1.-40.	1.-40.
Harmonics, per order / current	1.-40.	1.-40.
Unbalanced	No	No
Positive, negative and zero system	Yes	Yes
Measuring accuracy for voltage	0.2 %	0.2 %
Measuring accuracy for current	0.2 %	0.2 %
Measurement accuracy for active energy (kWh, .../5 A)	Class 0.5S	Class 0.5S
Number of digital inputs		
Number of digital outputs		
Number of pulse outputs		
Current-measuring channels	3	3
Temperature input	No	No
Memory; minimum and maximum values	Yes	Yes
Memory size		
Interface	Ethernet	Ethernet
Protocol	Modbus/TCP, Modbus RTU over Ethernet	Modbus/TCP, Modbus RTU over Ethernet
Note		

Ordering data

Type	Qty.	Order No.
ENERGY METER 525-24	1	**2540880000**

Type	Qty.	Order No.
ENERGY METER 525-230	1	**2540890000**

Note

Accessories

	Energy Meter 525-24	Qty.	Order No.
DIN rail adapters	ENERGY METER BRACKET L1	1	**2433060000**
Seal	ENERGY METER SEAL L96-2	1	**2495610000**
Fixing clamps	ENERGY METER FIXING SET	1	**2433030000**

	Energy Meter 525-230	Qty.	Order No.
DIN rail adapters	ENERGY METER BRACKET L1	1	**2433060000**
Seal	ENERGY METER SEAL L96-2	1	**2495610000**
Fixing clamps	ENERGY METER FIXING SET	1	**2433030000**

Note

Energy meters for front panel mounting

Energy Meter 610-24

Energy Meter 610-230

Technical data

	Energy Meter 610-24	Energy Meter 610-230
Measurement range, voltage L-N, AC	277 V	277 V
Measurement range, voltage L-L, AC	480 V	480 V
Surge voltage category	300 V CAT III	300 V CAT III
Voltage supply	24 - 90 V AC (50/60 Hz), 24 - 90 V DC	90 - 277 V AC (50/60 Hz), 90 - 250 V DC
Three-wire system	Yes	Yes
Four-wire system	Yes	Yes
Quadrants	4	4
Sampling frequency 50/60 Hz	25.6 kHz	25.6 kHz
Continuous measurements	Yes	Yes
Effective value from the period (50/60 Hz)	10 / 12	10 / 12
Measurement result per second	5	5
Residual current measuring	No	No
Harmonics, per order / voltage	1.-40.	1.-40.
Harmonics, per order / current	1.-40.	1.-40.
Unbalanced	No	No
Positive, negative and zero system	Yes	Yes
Measuring accuracy for voltage	0.2 %	0.2 %
Measuring accuracy for current	0.2 %	0.2 %
Measurement accuracy for active energy (kWh, .../5 A)	Class 0.5S	Class 0.5S
Number of digital inputs	4	4
Number of digital outputs	6	6
Number of pulse outputs	6	6
Current-measuring channels	4	4
Temperature input	No	No
Memory; minimum and maximum values	Yes	Yes
Memory size	256 MB	256 MB
Interface	RS485: 9,6 – 115,2 kbps, USB	RS485: 9,6 – 115,2 kbps, USB
Protocol	Modbus RTU	Modbus RTU
Note		

Ordering data

Type	Qty.	Order No.
ENERGY METER 610-24	1	**2540920000**

Type	Qty.	Order No.
ENERGY METER 610-230	1	**2540850000**

Note

Accessories

	Qty.	Order No.
DIN rail adapters: ENERGY METER BRACKET L1	1	**2433060000**
Seal: ENERGY METER SEAL L96-2	1	**2495610000**
Fixing clamps: ENERGY METER FIXING SET	1	**2433030000**

	Qty.	Order No.
ENERGY METER BRACKET L1	1	**2433060000**
ENERGY METER SEAL L96-2	1	**2495610000**
ENERGY METER FIXING SET	1	**2433030000**

Note

Energy meters for front panel mounting

Energy Meter 610 PB-24

Energy Meter 610 PB-230

Technical data

	Energy Meter 610 PB-24	Energy Meter 610 PB-230
Measurement range, voltage L-N, AC	277 V	277 V
Measurement range, voltage L-L, AC	480 V	480 V
Surge voltage category	300 V CAT III	300 V CAT III
Voltage supply	24 - 90 V AC (50/60 Hz), 24 - 90 V DC	90 - 277 V AC (50/60 Hz), 90 - 250 V DC
Three-wire system	Yes	Yes
Four-wire system	Yes	Yes
Quadrants	4	4
Sampling frequency 50/60 Hz	25.6 kHz	25.6 kHz
Continuous measurements	Yes	Yes
Effective value from the period (50/60 Hz)	10 / 12	10 / 12
Measurement result per second	5	5
Residual current measuring	No	No
Harmonics, per order / voltage	1.-40.	1.-40.
Harmonics, per order / current	1.-40.	1.-40.
Unbalanced	No	No
Positive, negative and zero system	Yes	Yes
Measuring accuracy for voltage	0.2 %	0.2 %
Measuring accuracy for current	0.2 %	0.2 %
Measurement accuracy for active energy (kWh, .../5 A)	Class 0.5S	Class 0.5S
Number of digital inputs	4	4
Number of digital outputs	6	6
Number of pulse outputs	6	6
Current-measuring channels	4	4
Temperature input	No	No
Memory; minimum and maximum values	Yes	Yes
Memory size	256 MB	256 MB
Interface	RS485: 9,6 – 115,2 kbps, Profibus DP, USB	RS485: 9,6 – 115,2 kbps, Profibus DP, USB
Protocol	Modbus RTU, Profibus DP V0	Modbus RTU, Profibus DP V0
Note		

Ordering data

Type	Qty.	Order No.
ENERGY METER 610-PB-24	1	**2540860000**

Type	Qty.	Order No.
ENERGY METER 610-PB-230	1	**2540870000**

Note

Accessories

	Qty.	Order No.
DIN rail adapters	ENERGY METER BRACKET L1	1	**2433060000**
Seal	ENERGY METER SEAL L96-2	1	**2495610000**
Fixing clamps	ENERGY METER FIXING SET	1	**2433030000**

	Qty.	Order No.
ENERGY METER BRACKET L1	1	**2433060000**
ENERGY METER SEAL L96-2	1	**2495610000**
ENERGY METER FIXING SET	1	**2433030000**

Note

Energy meters for front panel mounting

Energy Meter 700 PN-24

Energy Meter 700 PN-230

Technical data

Measurement range, voltage L-N, AC	277 V	277 V
Measurement range, voltage L-L, AC	480 V	480 V
Surge voltage category	300 V CAT III	300 V CAT III
Voltage supply	24 - 90 V AC (50/60 Hz), 24 - 90 V DC	90 - 277 V AC (50/60 Hz), 90 - 250 V DC
Three-wire system	Yes	Yes
Four-wire system	Yes	Yes
Quadrants	4	4
Sampling frequency 50/60 Hz	25.6 kHz	25.6 kHz
Continuous measurements	Yes	Yes
Effective value from the period (50/60 Hz)	10 / 12	10 / 12
Measurement result per second	5	5
Residual current measuring	Yes	Yes
Harmonics, per order / voltage	1.-40.	1.-40.
Harmonics, per order / current	1.-40.	1.-40.
Unbalanced	No	No
Positive, negative and zero system	Yes	Yes
Measuring accuracy for voltage	0.2 %	0.2 %
Measuring accuracy for current	0.2 %	0.2 %
Measurement accuracy for active energy (kWh, .../5 A)	Class 0.5S	Class 0.5S
Number of digital inputs	3	3
Number of digital outputs	5	5
Number of pulse outputs	5	5
Current-measuring channels	4 + 2	4 + 2
Temperature input	Yes	Yes
Memory; minimum and maximum values	Yes	Yes
Memory size		
Interface	RS485: 9,6 – 115,2 kbps, Ethernet, Web server	RS485: 9,6 – 115,2 kbps, Ethernet, Web server
Protocol	PROFINET, Modbus RTU, Modbus TCP/IP, Modbus RTU over Ethernet, SNMP	PROFINET, Modbus RTU, Modbus TCP/IP, Modbus RTU over Ethernet, SNMP
Note		

Ordering data

Type	Qty.	Order No.
ENERGY METER 700-PN-24	1	**2500870000**

Type	Qty.	Order No.
ENERGY METER 700-PN-230	1	**2500890000**

Note

Accessories

	Qty.	Order No.
DIN rail adapters		
ENERGY METER BRACKET L1	1	**2433060000**
Seal		
ENERGY METER SEAL L96-2	1	**2495610000**
Fixing clamps		
ENERGY METER FIXING SET	1	**2433030000**

	Qty.	Order No.
ENERGY METER BRACKET L1	1	**2433060000**
ENERGY METER SEAL L96-2	1	**2495610000**
ENERGY METER FIXING SET	1	**2433030000**

Note

Energy meters for front panel mounting

Energy Meter 750-24

Energy Meter 750-230

Technical data

	Energy Meter 750-24	Energy Meter 750-230
Measurement range, voltage L-N, AC	277 V	277 V
Measurement range, voltage L-L, AC	480 V	480 V
Surge voltage category	300 V CAT III	300 V CAT III
Voltage supply	24 - 90 V AC (50/60 Hz), 24 - 90 V DC	90 - 277 V AC (50/60 Hz), 90 - 250 V DC
Three-wire system	Yes	Yes
Four-wire system	Yes	Yes
Quadrants	4	4
Sampling frequency 50/60 Hz	25.6 kHz	25.6 kHz
Continuous measurements	Yes	Yes
Effective value from the period (50/60 Hz)	10 / 12	10 / 12
Measurement result per second	5	5
Residual current measuring	Yes	Yes
Harmonics, per order / voltage	1.-40.	1.-40.
Harmonics, per order / current	1.-40.	1.-40.
Unbalanced	No	No
Positive, negative and zero system	Yes	Yes
Measuring accuracy for voltage	0.2 %	0.2 %
Measuring accuracy for current	0.2 %	0.2 %
Measurement accuracy for active energy (kWh, .../5 A)	Class 0.5S	Class 0.5S
Number of digital inputs	3	3
Number of digital outputs	5	5
Number of pulse outputs	5	5
Current-measuring channels	4 + 2	4 + 2
Temperature input	Yes	Yes
Memory; minimum and maximum values	Yes	Yes
Memory size	256 MB	256 MB
Interface	RS485: 9,6 – 115,2 kbps, Ethernet, Web server/e-mail	RS485: 9,6 – 115,2 kbps, Ethernet, Web server/e-mail
Protocol	Modbus RTU, Modbus-Gateway, Modbus TCP/IP, Modbus RTU over Ethernet, SNMP, BACnet (optional)	Modbus RTU, Modbus-Gateway, Modbus TCP/IP, Modbus RTU over Ethernet, SNMP, BACnet (optional)
Note		

Ordering data

Type	Qty.	Order No.
ENERGY METER 750-24	1	**2540900000**

Type	Qty.	Order No.
ENERGY METER 750-230	1	**2540910000**

Note

Accessories

	Qty.	Order No.
DIN rail adapters		
ENERGY METER BRACKET L1	1	**2433060000**
Seal		
ENERGY METER SEAL L96-2	1	**2495610000**
Fixing clamps		
ENERGY METER FIXING SET	1	**2433030000**

	Qty.	Order No.
ENERGY METER BRACKET L1	1	**2433060000**
ENERGY METER SEAL L96-2	1	**2495610000**
ENERGY METER FIXING SET	1	**2433030000**

Note

Energy Analyser

Energy Analyser	Introduction	C.2
	Selection table	C.4
	Energy Analyser	C.5

Holistic analysis of the quality of electrical supply networks

Energy analyser for transparency and improved plant availability

The quality of the electrical network is an important parameter for the effectiveness and availability of industrial plants and production facilities. The Energy Analyser 750 is the first step towards increased added value and is particularly suitable for monitoring power quality according to common standards such as EN 50160, IEEE 519 or IEC 61000-2-4.

An increasing number of non-linear consumers and plant components are being used in production facilities. They have an impact on, for example, network frequency, phase shift and the amplitude of phases. This influences the quality of the electrical energy and thus the uptime of the plant. The new Energy Analyser 750 measures all quality parameters of the electrical supply network, from the symmetry to transients and many other parameters besides.

Integrated monitoring of residual current
The built-in residual current measurement highlights creeping increases in residual current before fuses or residual current detectors switch off the section of the system. This maximizes operating times.

Large, clear display
The large QVGA colour display on the device clearly visualises all measurement parameters and allows convenient adjustment of the system parameters.

Top-hat rail devices for simple requirements
For less comprehensive measurements, we offer the Energy Analyser D550, a very small device for installation on standard DIN rails.

With the Energy Analyser 750, you can carry out comprehensive checks on the quality of the electrical energy in your production facility and initiate optimization steps to maximize the effectiveness and availability of your plant. Important events can be recorded as required.

Continuously monitoring voltage quality

Standard-compliant measurements with the Energy Analyser 750

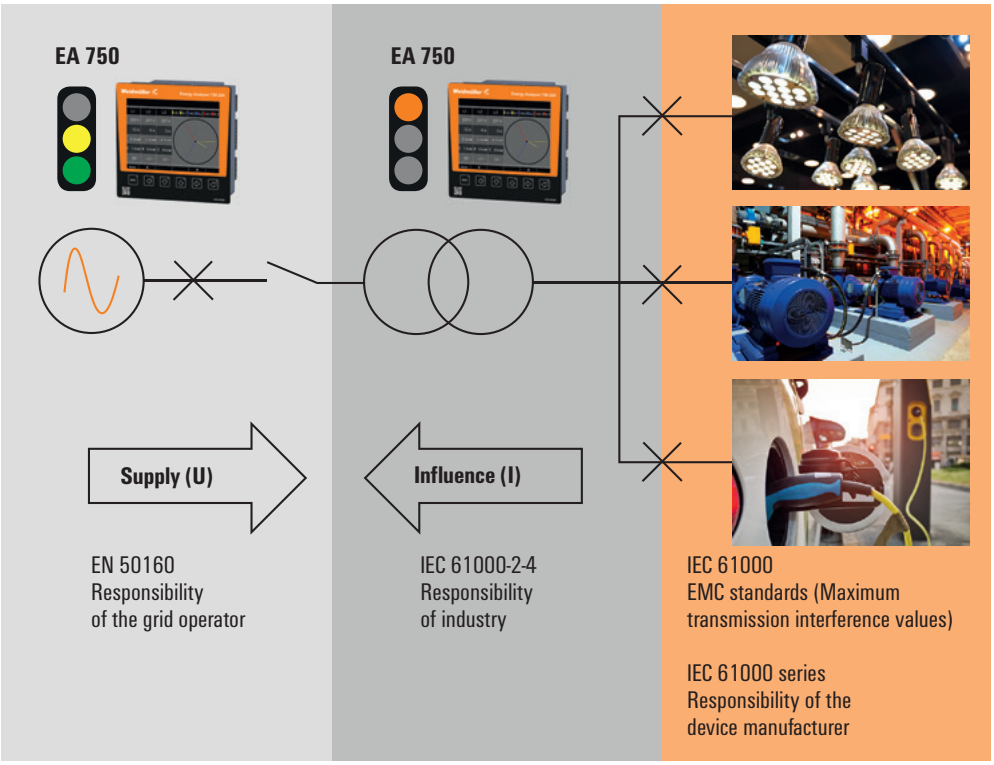

Power quality – standards and guidelines

Within Europe, EN 50160 is the standard for describing the quality of an electrical power supply. The standard mainly describes the characteristics of the supply voltage at the point of supply to the customer in public low and medium voltage networks under normal operating conditions. EN 50160 applies to the grid voltage, i.e. the voltage measured at the point of connection with the grid. A voltage distortion in the public grid distorts the voltage in the industrial grid, and should therefore be monitored continuously.

The IEC 61000-2-4 standard defines numerical thresholds for industrial and non-public electricity distribution systems with nominal voltages of up to 35 kV. The IEC 61000-2-4 standard should apply to the quality of the voltage at the point of supply to the consumer. That is why it serves as the basis for many product and machinery design standards.

It defines the immunity levels for voltage distortions that machinery and systems in industrial enterprises need to be able to withstand.
If the level is exceeded, this may result in outages that the machinery or system supplier is not liable for. Monitoring in accordance with IEC 61000-2-4 is therefore advisable. New standards such as EN 50600-2-2 for electrical systems in data processing centres also require voltage quality in accordance with EN 50160 and IEC 61000-2-4.

The Energy Analyser 750 facilitates the comprehensive monitoring of specific parameters of voltage quality, and supports compliance with all required standards.

Selection table

Type	EA D550		EA 550		EA 750	
	24	230	24	230	24	230
Order No.	2425510000	2489780000	2602580000	2425500000	2534160000	2534130000
Type of mounting	DIN rail		Front panel mounting		Front panel mounting	
Display	LCD		Graphic		Colour graphic	
Technical Characteristics						
Measuring range, Voltage L-N, AC (without transducer)	277 V		417 V		347 V	
Measuring range, Voltage L-L, AC (without transducer)	480 V		720 V (3 wire 600 V)		600 V	
Overvoltage category	300 V CAT III		600 V CAT III		600 V CAT III	
Power supply voltage	20 - 50 V AC; 20 - 70 V DC	95 - 240 V AC; 135 - 340 V DC	48 - 110 V AC, 24 - 150 V DC	95 - 240 V AC; 80 - 300 V DC	48 - 110 V AC; 24 - 150 V DC	95 - 240 V AC; 80 - 300 V DC
Three wire	•		•		•	
Four wire	•		•		•	
Sampling frequency 50/60 Hz	20 kHz		20 kHz		25.6 kHz	
Measurement points per second	20,000		20,000		25,600	
Measurement results per second	5		5		5	
Measuring accuracy for voltage	0.20 %		0.10 %		0.10 %	
Measuring accuracy for current	0.25 %		0.20 %		0.10 %	
Number of digital inputs	2		2		2	
Number of digital outputs	2		2		2	
Number of pulse outputs	2		2		2	
Current measurement channel	4		4+2		4+2	
Temperature input	1		1		1	
Memory size	128 MB		256 MB		256 MB	
Number of memory values	5.000 k		10.000 k		10.000 k	
Interfaces						
RS232	•		-		-	
RS485	•		•		•	
Profibus DP	-		•		•	
M-Bus	-				-	
Ethernet	•		•		•	
Webserver / E-Mail	• / •		• / •		• / •	
Protocols						
Modbus RTU	•		•		•	
Modbus-Gateway	•		•		•	
Profibus DP V0	-		•		•	
Modbus TCP/IP, Modbus RTU over Ethernet, SNMP	•		•		•	
BACnet (optional)	•		•		•	

Energy analysis instruments

Energy Analyser D550-24

Energy Analyser D550-230

Technical data

	Energy Analyser D550-24	Energy Analyser D550-230
Measurement range, voltage L-N, AC	277 V	277 V
Measurement range, voltage L-L, AC	480 V	480 V
Surge voltage category	300 V CAT III	300 V CAT III
Voltage supply	20 ... 50 V AC ±10%, 20 ... 70 V DC ±10%	95 - 240 V AC, 135 - 340 V DC
Three-wire system	Yes	Yes
Four-wire system	Yes	Yes
Quadrants	4	4
Sampling frequency 50/60 Hz	20 kHz	20 kHz
Continuous measurements	Yes	Yes
Effective value from the period (50/60 Hz)	10 / 12	10 / 12
Measurement result per second	5	5
Residual current measuring	No	No
Harmonics, per order / voltage	1.-40.	1.-40.
Harmonics, per order / current	1.-40.	1.-40.
Unbalanced	Yes	Yes
Positive, negative and zero system	Yes	Yes
Measuring accuracy for voltage	0.2 %	0.2 %
Measuring accuracy for current	0.25 %	0.25 %
Measurement accuracy for active energy (kWh, .../5 A)	Class 0.5S	Class 0.5S
Number of digital inputs	2	2
Number of digital outputs	2	2
Number of pulse outputs	2	2
Current-measuring channels	4	4
Temperature input	Yes	Yes
Memory; minimum and maximum values	Yes	Yes
Memory size	128 MB	128 MB
Interface	RS232: 9.6 – 115.2 kbps, RS485: 9.6 – 921.6 kbps, Ethernet, Web server/e-mail	RS232: 9.6 – 115.2 kbps, RS485: 9.6 – 921.6 kbps, Ethernet, Web server/e-mail
Protocol	Modbus RTU, Modbus-Gateway, Modbus TCP/IP, Modbus RTU over Ethernet, SNMP, BACnet (optional)	Modbus RTU, Modbus-Gateway, Modbus TCP/IP, Modbus RTU over Ethernet, SNMP, BACnet (optional)
Note		

Ordering data

Type	Qty.	Order No.
ENERGY ANALYSER D550-24	1	**2489780000**

Type	Qty.	Order No.
ENERGY ANALYSER D550	1	**2425510000**

Energy analysis instruments

Energy Analyser 550-24

Energy Analyser 550-230

Technical data

	Energy Analyser 550-24	Energy Analyser 550-230
Measurement range, voltage L-N, AC	417 V	417 V
Measurement range, voltage L-L, AC	720 V	720 V
Surge voltage category	600 V CAT III	600 V CAT III
Voltage supply	48...110 V AC, 24...150 V DC	95 - 240 V AC, 80 - 300 V DC
Three-wire system	Yes	Yes
Four-wire system	Yes	Yes
Quadrants	4	4
Sampling frequency 50/60 Hz	20 kHz	20 kHz
Continuous measurements	Yes	Yes
Effective value from the period (50/60 Hz)	10 / 12	10 / 12
Measurement result per second	5	5
Residual current measuring	Yes	Yes
Harmonics, per order / voltage	1.-63.	1.-63.
Harmonics, per order / current	1.-63.	1.-63.
Unbalanced	Yes	Yes
Positive, negative and zero system	Yes	Yes
Measuring accuracy for voltage	0.1 %	0.1 %
Measuring accuracy for current	0.2 %	0.2 %
Measurement accuracy for active energy (kWh, .../5 A)	Class 0.2S	Class 0.2S
Number of digital inputs	2	2
Number of digital outputs	2	2
Number of pulse outputs	2	2
Current-measuring channels	4 + 2	4 + 2
Temperature input	Yes	Yes
Memory; minimum and maximum values	Yes	Yes
Memory size	256 MB	256 MB
Interface	RS485: 9.6 – 921.6 kbps, Profibus DP, Ethernet, Web server/e-mail	RS485: 9.6 – 921.6 kbps, Profibus DP, Ethernet, Web server/e-mail
Protocol	Modbus RTU, Modbus-Gateway, Modbus TCP/IP, Modbus RTU over Ethernet, SNMP, Profibus DP V0, BACnet (optional)	Modbus RTU, Modbus-Gateway, Modbus TCP/IP, Modbus RTU over Ethernet, SNMP, Profibus DP V0, BACnet (optional)
Note		

Ordering data

Type	Qty.	Order No.
ENERGY ANALYSER 550-24	1	**2602580000**

Type	Qty.	Order No.
ENERGY ANALYSER 550	1	**2425500000**

Note

Accessories

	Qty.	Order No.
DIN rail adapters		
ENERGY METER BRACKET B1	1	**2433040000**
Seal		
ENERGY METER SEAL L144	1	**2495630000**

	Qty.	Order No.
ENERGY METER BRACKET B1	1	**2433040000**
ENERGY METER SEAL L144	1	**2495630000**

Note

Energy analysis instruments

Energy Analyser 750-24

Energy Analyser 750-230

Technical data

Measurement range, voltage L-N, AC	347 V	347 V
Measurement range, voltage L-L, AC	600 V	600 V
Surge voltage category	600 V CAT III	600 V CAT III
Voltage supply	48...110 V AC, 24...150 V DC	95 - 240 V AC, 80 - 300 V DC
Three-wire system	Yes	Yes
Four-wire system	Yes	Yes
Quadrants	4	4
Sampling frequency 50/60 Hz	25.6 kHz	25.6 kHz
Continuous measurements	Yes	Yes
Effective value from the period (50/60 Hz)	10 / 12	10 / 12
Measurement result per second	5	5
Residual current measuring	Yes	Yes
Harmonics, per order / voltage	1.-63.	1.-63.
Harmonics, per order / current	1.-63.	1.-63.
Unbalanced	Yes	Yes
Positive, negative and zero system	Yes	Yes
Measuring accuracy for voltage	0.1 %	0.1 %
Measuring accuracy for current	0.1 %	0.1 %
Measurement accuracy for active energy (kWh, .../5 A)	Class 0.2S	Class 0.2S
Number of digital inputs	2	2
Number of digital outputs	2	2
Number of pulse outputs	2	2
Current-measuring channels	4 + 2	4 + 2
Temperature input	Yes	Yes
Memory; minimum and maximum values	Yes	Yes
Memory size	256 MB	256 MB
Interface	RS485: 9.6 – 921.6 kbps, Profibus DP, Ethernet, Web server/e-mail	RS485: 9.6 – 921.6 kbps, Ethernet, Profibus DP, Web server/e-mail
Protocol	Modbus RTU, Modbus-Gateway, Modbus TCP/IP, Modbus RTU over Ethernet, SNMP, Profibus DP V0, BACnet (optional)	Modbus RTU, Modbus-Gateway, Modbus TCP/IP, Modbus RTU over Ethernet, SNMP, Profibus DP V0, BACnet (optional)
Note		

Ordering data

Type	Qty.	Order No.
ENERGY ANALYSER 750-24	1	**2534160000**

Type	Qty.	Order No.
ENERGY ANALYSER 750-230	1	**2534130000**

Note

Accessories

		Qty.	Order No.
DIN rail adapters	ENERGY METER BRACKET B1	1	**2433040000**
Seal	ENERGY METER SEAL L144	1	**2495630000**

	Qty.	Order No.
ENERGY METER BRACKET B1	1	**2433040000**
ENERGY METER SEAL L144	1	**2495630000**

Note

Energy Logger

Energy Logger	Introduction	D.2
	Energy Logger	D.3

Provide measurement data efficiently and conveniently

Our energy logger collects consumption and process data

Integrated temperature measurement
The Energy Logger D550 has an input for temperature measurement. This saves costs in setting up an infrastructure for the measurement of process parameters

Integrated ModBus interface
As well as the consumption data of simple measuring devices, measurement values from devices with a ModBus interface can also be forwarded over a network.

Integrated data memory
Data can be saved long-term in the device's built-in 32 MB memory.

As well as the consumption of electrical energy, the consumption of, for example, compressed air, water and gas can also be optimised. Energy Logger D550 enables the provision of cross-plant measurement data in the network.

Measuring devices with a simple S0 interface are widespread. But they cannot transfer measured values direct into the internal network. Therefore, a gateway is required for each measuring device. The Energy Logger D550 can collect and save impulse signals from up to 15 measurement devices and forwards them via a LAN interface.

This particularly compact Energy Logger D550 is the costeffective solution to simplify and accelerate the collecting and forwarding of consumption and process data.

Energy Logger

Energy Logger D550

Technical data

Surge voltage category	300 V CAT III
Voltage supply	20 - 250 V AC, 20 - 300 V DC20 - 300 V DC
Operating-hours counter	Yes
Number of digital inputs	15
Number of digital outputs	3
Memory size	32 MB
Software	ecoExplorer go®
Interfaces	
Interface	RS485: 9,6 – 115,2 kbps, Ethernet
Protocol	
Protocol	Modbus RTU, Modbus-Gateway, Modbus TCP/IP, Modbus RTU over Ethernet, SNMP
Note	

Ordering data

Type	Qty.	Order No.
ENERGY LOGGER D550	1	**2425520000**

Note

Accessories

	Qty.	Order No.
SO module 1.3 kOhm		
ENERGY LOGGER SO MODULE	1	**2446170000**

Note

Current transformer

Current transformer	Introduction	E.2
	Cable-type current transformer	E.4
	Mini current transformer	E.11
	Plug-on current transformer	E.12
	Difference current transformer (Residual Current Monitoring, RCM)	E.14
	Rogowski current transformer system	E.18
	Instrument transformer wiring	E.21

Compatibility for different measurement environments

Current transformers from Weidmüller

Current transformers are mainly used where currents cannot be measured directly. They are special forms of transformers which translate the primary current into a (usually) smaller, standardized secondary current of a certain accuracy (class) and galvanically separate the primary and secondary circuits. The physically induced saturation phenomenon of the core material additionally ensures protection of the secondary circuit against excessive currents.

A basic distinction can be made between single-conductor current transformers and wound current transformers.
The most common representative of the single-conductor current transformers is the clip-on current transformer. This is plugged onto the current-carrying conductor and thus forms a transformer with a primary winding or with secondary windings corresponding to the respective transmission ratio.

Proper selection of the primary rated current is important for measurement accuracy. A ratio directly above the measured or defined current (In) is recommended - for example:
In = 1.154 A, selected transformer ratio = 1.250/5.

The rated current can also be defined based on the following considerations:

- Transformer rated current multiplied by approximately 1.1 (next transformer size)
- Fuse rated current (transformer rated current) of the measured system part (LV, UV)
- Actual rated current multiplied by 1.2 (recommended if the actual current is significantly lower than the transformer rating or the fuse rating)

Overdimensioning of the current transformer must be avoided, otherwise the measurement accuracy will drop considerably in some cases for relatively small currents (based on the primary rated current).

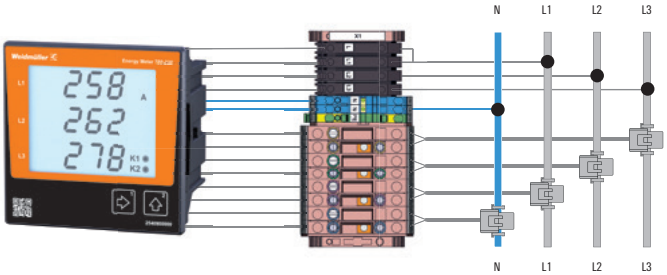

Overview of current converters

Type Technical information	Plug-on current transformer	Rod current transformer
Application	New systems	New systems
Coil	Closed	Closed
Installation	Round cable, copper busbar, terminal rail, mounting plate	Round cable (insulated)
Primary current	60 A...2,500 A	32 A...64 A
Secondary current	5 A	1 A
Accuracy class	0.5 oder 1	1
Ambient temperature	-5...+50 °C	-5...+50 °C
Standards	EN 61869-2	IEC 61869-2

Rated current
The rated or formerly nominal current is the value of the value of the primary and secondary current indicated on the rating plate and secondary current (primary rated current, secondary rated current) for which the current transformer is rated. Standardized rated currents are - except for classes 0.2 S and 0.5 S - 10, 12.5, 15, 20, 25, 30, 40, 50, 60 and 75 A and their decimal multiples and parts thereof. Standardized secondary currents are 1 and 5 A.

Translation ratio
The rated ratio is the ratio of the primary rated current to the secondary rated current and is indicated as an unabbreviated fraction on the rating plate. Most commonly, x / 5 A transformers are used, because most measuring instruments have the higher accuracy class at 5 A. For technical and above all economic reasons, x /1 A converters are recommended for long measuring cable lengths. The line losses are only 4 percent for 1 A converters compared to 5 A converters. However, the measuring devices here often have the lower measuring accuracy.

Split-core current transformer	RCM current transformers	System with Rogowski coil and analysis unit
Retrofitting	New systems/Retrofitting	Retrofitting
Detachable	Closed/Detachable	Detachable with bayonet joint
Round cable (insulated), copper busbar	Round cable, copper busbar	Round cable, copper busbar
50 A...5,000 A	18 A...25 A	5,000 A
1 A or 5 A	0.0417 A	1 A
0.5; 1 or 3		0.5/0.5
-5...+55 °C	-10 °C...+70 °C	-40...+80 °C
EN 61869-2	EN 61869-2	IEC 61010 / EN 61869-2

Cable-type current transformer

The KCMA series cable-type current transformer is mainly used for retrofitting in existing systems. Due to its compact design with dimensions of 41.6 mm x 64.5 mm x 68 mm, it is especially suited for installation in hard-to-reach places or use in locations with restricted dimensional freedom. The KCMA-18 registers primary currents of 50 A to 250 A and transforms these into up to 5 A on the secondary side. To install the transformer, the locking mechanism is opened, the transformer is positioned around the primary conductor and is then closed again with an audible click. Once the secondary cables are successfully connected, the measuring apparatus is immediately ready for operation.

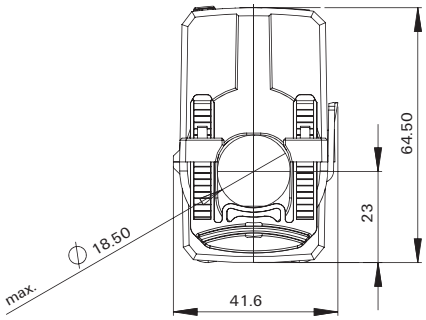

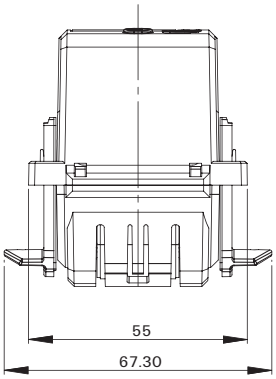

Ordering data

Order No.	Type	Primary current	Secondary current max.	Tolerance class	Load	Round conductor	Qty.
1482020000	KCMA-18-50-1A-1VA-3	50 A	1 A	3	1 VA	18.50 mm	1
2420780000	KCMA-18-75-1A-1VA-3	75 A	1 A	3	1 VA	18.50 mm	1
1482010000	KCMA-18-100-1A-1,25VA-3	100 A	1 A	3	1.25 VA	18.50 mm	1
2752980000	KCMA-18-125-1A-1,5VA-3	125 A	1 A	3	1.5 VA	18.50 mm	1
2420770000	KCMA-18-150-1A-2VA-3	150 A	1 A	3	2 VA	18.50 mm	1
2420760000	KCMA-18-200-1A-3VA-3	200 A	1 A	3	3 VA	18.50 mm	1
2420750000	KCMA-18-250-1A-4VA-3	250 A	1 A	3	4 VA	18.50 mm	1
2752990000	KCMA-18-100-1A-0.3VA-1	100 A	1 A	1	0.3 VA	18.50 mm	1
2753000000	KCMA-18-125-1A-0.5VA-1	125 A	1 A	1	0.5 VA	18.50 mm	1
2753010000	KCMA-18-150-1A-1VA-1	150 A	1 A	1	1 VA	18.50 mm	1
2753020000	KCMA-18-200-1A-1.5VA-1	200 A	1 A	1	1.5 VA	18.50 mm	1
1482000000	KCMA-18-250-1A-1,5VA-1	250 A	1 A	1	1.5 VA	18.50 mm	1
2753030000	KCMA-18-150-5A-1VA-1	150 A	5 A	1	1 VA	18.50 mm	1
2753040000	KCMA-18-200-5A-1,5VA-1	200 A	5 A	1	1.5 VA	18.50 mm	1
2753050000	KCMA-18-250-5A-1VA-0.5	250 A	5 A	0,5	1 VA	18.50 mm	1
Note							

Cable-type current transformer

The KCMA-28 series cable-type current transformer is mainly used for retrofitting in existing systems. Due to its compact design with dimensions of 49 mm x 59 mm x 79.5 mm, it is especially suited for installation in hard-to-reach places or use in locations with restricted dimensional freedom. The KCMA-28 registers primary currents of 200 A to 500 A and transforms these into up to 5 A on the secondary side. To install the transformer, the locking mechanism is opened, the transformer is positioned around the primary conductor and is then closed again with an audible click. Once the secondary cables are successfully connected, the measuring apparatus is immediately ready for operation.

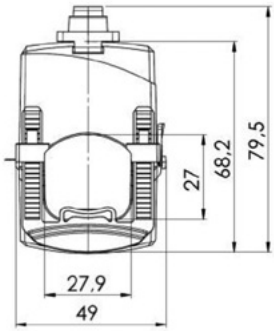

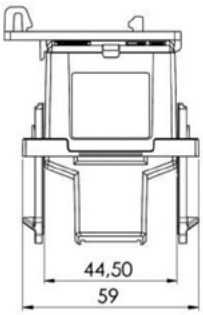

Ordering data

Order No.	Type	Primary current	Secondary current max.	Tolerance class	Load	Round conductor	Qty.
2753060000	KCMA-28-200-1A-0.3VA-1	200 A	1 A	1	0.3 VA	27.00 mm	1
2753070000	KCMA-28-250-1A-1VA-1	250 A	1 A	1	1 VA	27.00 mm	1
2753080000	KCMA-28-300-1A-1.5VA-1	300 A	1 A	1	1.5 VA	27.00 mm	1
2753090000	KCMA-28-400-1A-2.5VA-1	400 A	1 A	1	2.5 VA	27.00 mm	1
2753100000	KCMA-28-500-1A-1VA-0.5	500 A	1 A	0,5	1 VA	27.00 mm	1
2753110000	KCMA-28-250-5A-1VA-1	250 A	5 A	1	1 VA	27.00 mm	1
2753120000	KCMA-28-300-5A-1.5VA-1	300 A	5 A	1	1.5 VA	27.00 mm	1
2753130000	KCMA-28-400-5A-2.5VA-1	400 A	5 A	1	2.5 VA	27.00 mm	1
2753140000	KCMA-28-500-5A-3VA-1	500 A	5 A	1	3 VA	27.00 mm	1
Note							

Cable-type current transformer

The KCMA-32 series cable-type current transformer is mainly used for retrofitting in existing systems. Due to its compact design with dimensions of 59.2 mm x 96.4 mm x 90 mm, it is especially suited for installation in hard-to-reach places or use in locations with restricted dimensional freedom. The KCMA-32 registers primary currents of 400 A to 600 A and transforms these into up to 5 A on the secondary side. To install the transformer, the locking mechanism is opened, the transformer is positioned around the primary conductor and is then closed again with an audible click. Once the secondary cables are successfully connected, the measuring apparatus is immediately ready for operation.

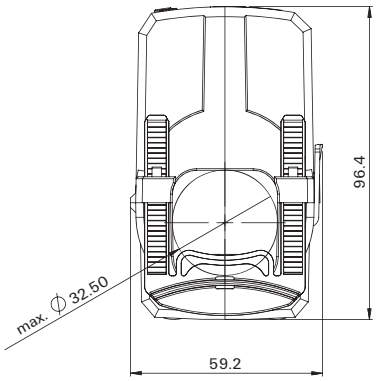

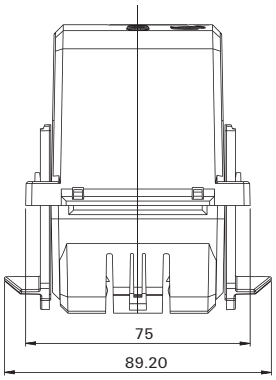

Ordering data

Order No.	Type	Primary current	Secondary current max.	Tolerance class	Load	Round conductor	Qty.
1481990000	KCMA-32-400-1A-5VA-1	400 A	1 A	1	5 VA	32.50 mm	1
1481980000	KCMA-32-600-1A-5VA-1	600 A	1 A	1	5 VA	32.50 mm	1
2420730000	KCMA-32-400-5A-5VA-1	400 A	5 A	1	5 VA	32.50 mm	1
2420740000	KCMA-32-500-5A-5VA-1	500 A	5 A	1	5 VA	32.50 mm	1
2420720000	KCMA-32-600-5A-5VA-1	600 A	5 A	1	5 VA	32.50 mm	1
Note							

Cable-type current transformer

The KCMA-42 series cable-type current transformer is mainly used for retrofitting in existing systems. As a result of its compact design with dimensions of 72.2 mm x 120.6 mm x 98.1 mm, it is especially suited for installation in hard-to-reach places or use in locations with restricted dimensional freedom. The KCMA-42 registers primary currents of 250 A to 1000 A and transforms these into up to 5 A on the secondary side. To install the transformer, the locking mechanism is opened, the transformer is positioned around the primary conductor and is then closed again with an audible click. Once the secondary cables are successfully connected, the measuring apparatus is immediately ready for operation.

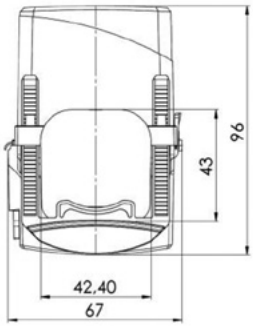

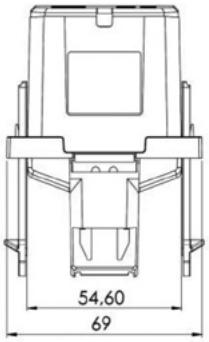

Ordering data

Order No.	Type	Primary current	Secondary current max.	Tolerance class	Load	Round conductor	Qty.
2753150000	KCMA-42-250-1A-2.5VA-1	250 A	1 A	1	2.5 VA	42.00 mm	1
2753160000	KCMA-42-300-1A-2.5VA-1	300 A	1 A	1	2.5 VA	42.00 mm	1
2753170000	KCMA-42-400-1A-2.5VA-0.5	400 A	1 A	0,5	2.5 VA	42.00 mm	1
2753180000	KCMA-42-500-1A-2.5VA-0.5	500 A	1 A	0,5	2.5 VA	42.00 mm	1
2753190000	KCMA-42-600-1A-2.5VA-0.5	600 A	1 A	0,5	2.5 VA	42.00 mm	1
2753200000	KCMA-42-750-1A-2.5VA-0.5	750 A	1 A	0,5	2.5 VA	42.00 mm	1
2753210000	KCMA-42-800-1A-2.5VA-0.5	800 A	1 A	0,5	2.5 VA	42.00 mm	1
2753220000	KCMA-42-1000-1A-2.5VA-0.5	1000 A	1 A	0,5	2.5 VA	42.00 mm	1
2753230000	KCMA-42-300-5A-2.5VA-1	300 A	5 A	1	2.5 VA	42.00 mm	1
2753240000	KCMA-42-400-5A-5VA-1	400 A	5 A	1	5 VA	42.00 mm	1
2753250000	KCMA-42-500-5A-5VA-1	500 A	5 A	1	5 VA	42.00 mm	1
2753260000	KCMA-42-600-5A-2.5VA-0.5	600 A	5 A	0,5	2.5 VA	42.00 mm	1
2753270000	KCMA-42-750-5A-2.5VA-0.5	750 A	5 A	0,5	2.5 VA	42.00 mm	1
2753280000	KCMA-42-800-5A-2.5VA-0.5	800 A	5 A	0,5	2.5 VA	42.00 mm	1
2753290000	KCMA-42-1000-5A-2.5VA-0.5	1000 A	5 A	0,5	2.5 VA	42.00 mm	1
Note							

Cable-type current transformer

The KCMA-44 series cable-type current transformer is mainly used for retrofitting in existing systems. As a result of its compact design with dimensions of 72.2 mm x 120.6 mm x 98 mm, it is especially suited for installation in hard-to-reach places or use in locations with restricted dimensional freedom. The KCMA-44 registers primary currents of 750 A to 1000 A and transforms these into up to 5 A on the secondary side. To install the transformer, the locking mechanism is opened, the transformer is positioned around the primary conductor and is then closed again with an audible click. Once the secondary cables are successfully connected, the measuring apparatus is immediately ready for operation.

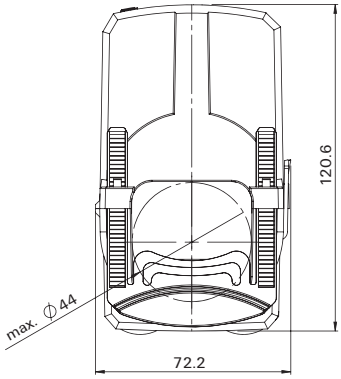

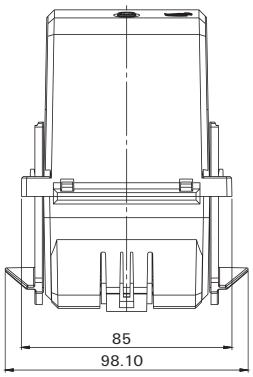

Ordering data

Order No.	Type	Primary current	Secondary current max.	Tolerance class	Load	Round conductor	Qty.
2420710000	KCMA-44-750-5A-5VA-1	750 A	5 A	1	5 VA	44.00 mm	1
2437370000	KCMA-44-800-5A-5VA-1	800 A	5 A	1	5 VA	44.00 mm	1
2437400000	KCMA-44-1000-5A-5VA-1	1000 A	5 A	1	5 VA	44.00 mm	1
Note							

Cable-type current transformer

The KCMA-5 series cable-type current transformer with its separable measuring core allows it to be retrofitted in existing systems without disconnecting the primary conductor. Thanks to the practical integrated interlock system, the transformer can be positioned around the primary conductor and then closed again with an audible click. The KCMA-5 registers primary currents of 250 A to 1000 A and transforms these into currents of up to 5 A on the secondary side.

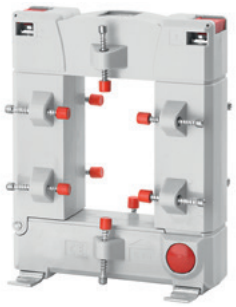

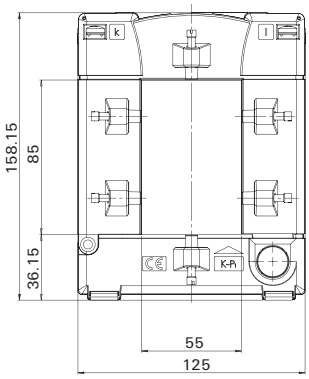

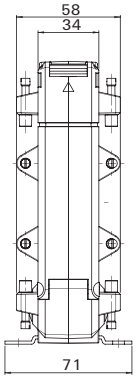

Ordering data

Order No.	Type	Primary current	Secondary current max.	Tolerance class	Load	Round conductor	Rail	Qty.
2753360000	KCMA 5-250-5A-1.5VA-1	250 A	5 A	1	1.5 VA	55.00 mm	50 x 80 mm	1
2753370000	KCMA 5-400-5A-1VA-0.5	400 A	5 A	0,5	1 VA	55.00 mm	50 x 80 mm	1
2753380000	KCMA 5-500-5A-2.5VA-0.5	500 A	5 A	0,5	2.5 VA	55.00 mm	50 x 80 mm	1
2753390000	KCMA 5-600-5A-2.5VA-0.5	600 A	5 A	0,5	2.5 VA	55.00 mm	50 x 80 mm	1
2753400000	KCMA 5-1000-5A-5VA-0.5	1000 A	5 A	0,5	5 VA	55.00 mm	50 x 80 mm	1
Note								

Cable-type current transformer

The KCMA-8 series cable-type current transformer with its separable measuring core allows it to be retrofitted in existing systems without disconnecting the primary conductor. Thanks to the practical integrated interlock system, the transformer can be positioned around the primary conductor and then closed again with an audible click. The KCMA-8 registers primary currents of 250 A to 5000 A and transforms these into currents of up to 5 A on the secondary side.

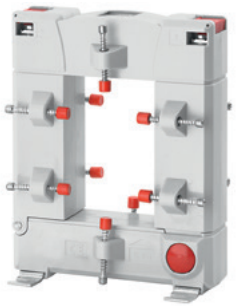

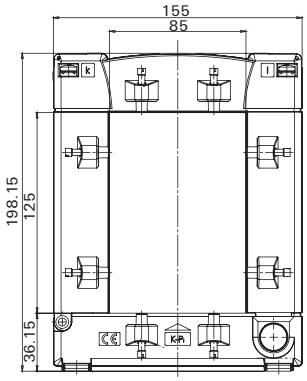

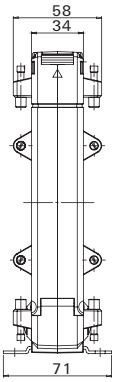

Ordering data

Order No.	Type	Primary current	Secondary current max.	Tolerance class	Load	Round conductor	Rail	Qty.
2728090000	KCMA-8-250-5A-1.5VA1	250 A	5 A	1	1.5 VA	80.00 mm	80 x 120 mm	1
2728100000	KCMA-8-500-5A-5VA1	500 A	5 A	1	5 VA	80.00 mm	80 x 120 mm	1
2728110000	KCMA-8-750-5A-2VA1	750 A	5 A	1	2 VA	80.00 mm	80 x 120 mm	1
2728130000	KCMA-8-1000-5A-10VA1	1000 A	5 A	1	10 VA	80.00 mm	80 x 120 mm	1
2728140000	KCMA-8-1200-5A-10VA1	1200 A	5 A	1	10 VA	80.00 mm	80 x 120 mm	1
2728150000	KCMA-8-1500-5A-15VA1	1500 A	5 A	1	15 VA	80.00 mm	80 x 120 mm	1
2728160000	KCMA-8-2000-5A-15VA1	2000 A	5 A	1	15 VA	80.00 mm	80 x 120 mm	1
2728170000	KCMA-8-2500-5A-15VA1	2500 A	5 A	1	15 VA	80.00 mm	80 x 120 mm	1
2728180000	KCMA-8-3000-5A-15VA1	3000 A	5 A	1	15 VA	80.00 mm	80 x 120 mm	1
2728190000	KCMA-8-4000-5A-15VA1	4000 A	5 A	1	15 VA	80.00 mm	80 x 120 mm	1
2728210000	KCMA-8-5000-5A-15VA1	5000 A	5 A	1	15 VA	80.00 mm	80 x 120 mm	1
2753410000	KCMA-8-600-5A-2.5VA-0.5	600 A	5 A	0,5	2.5 VA	80.00 mm	80 x 120 mm	1
2753420000	KCMA-8-800-5A-2.5VA-0.5	800 A	5 A	0,5	2.5 VA	80.00 mm	80 x 120 mm	1
2753430000	KCMA-8-1000-5A-5VA-0.5	1000 A	5 A	0,5	5 VA	80.00 mm	80 x 120 mm	1
2753450000	KCMA-8-1200-5A-5VA-0.5	1200 A	5 A	0,5	5 VA	80.00 mm	80 x 120 mm	1
Note								

Mini current transformer

The CMA-CTM 7 series mini current transformer is an inductive current transformer designed according to the transformer principle for circular primary conductors. The CMA-CTM 7 series current transformers are maintenance-free and are designed for primary currents of 32 A to 64 A. These are transformed into a current of up to 1 A on the secondary side.

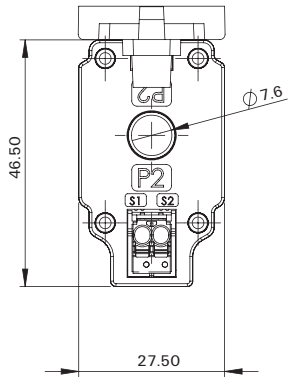

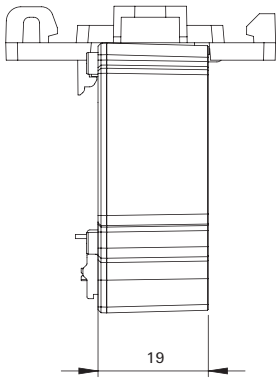

Ordering data

Order No.	Type	Primary current	Secondary current max.	Tolerance class	Load	Round conductor	Qty.
2525150000	CMA-CTM-7-32-1A-0.2VA-1	32 A	1 A	1	0.2 VA	7.60 mm	1
2556030000	CMA-CTM-7-50-1A-0.4VA-1	50 A	1 A	1	0.4 VA	7.60 mm	1
2556010000	CMA-CTM-7-64-1A-0.5VA-1	64 A	1 A	1	0.5 VA	7.60 mm	1
Note							

Plug-on current transformer

The CMA-31 series current transformer registers primary currents of 60 A to 2.500 A and transforms these into up to 5 A on the secondary side. The transformer is equipped with a maintenance-free, spring-balanced cage clamp and is especially suitable for installation on current bars and cables of new systems.

CMA-31

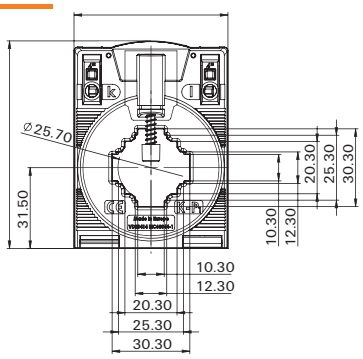

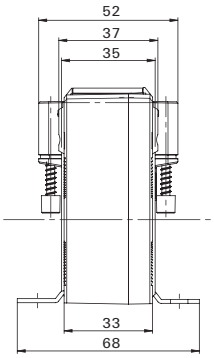

Ordering data

Order No.	Type	Primary current	Secondary current max.	Tolerance class	Load	Round conductor	Rail	Qty.
2421380000	CMA-31-60-5A-1,25VA-1	60 A	5 A	1	1.25 VA	25.70 mm	20 x 20 mm, 25 x 12 mm, 30 x 10 mm	1
1482040000	CMA-31-75-5A-2,5VA-1	75 A	5 A	1	2.5 VA	25.70 mm	20 x 20 mm, 25 x 12 mm, 30 x 10 mm	1
1482030000	CMA-31-100-5A-2,5VA-1	100 A	5 A	1	2.5 VA	25.70 mm	20 x 20 mm, 25 x 12 mm, 30 x 10 mm	1
2420960000	CMA-31-150-5A-5VA-1	150 A	5 A	1	5 VA	25.70 mm	20 x 20 mm, 25 x 12 mm, 30 x 10 mm	1
2420950000	CMA-31-200-5A-5VA-1	200 A	5 A	1	5 VA	25.70 mm	20 x 20 mm, 25 x 12 mm, 30 x 10 mm	1
2420940000	CMA-31-250-5A-5VA-1	250 A	5 A	1	5 VA	25.70 mm	20 x 20 mm, 25 x 12 mm, 30 x 10 mm	1
2420920000	CMA-31-400-5A-5VA-1	400 A	5 A	1	5 VA	25.70 mm	20 x 20 mm, 25 x 12 mm, 30 x 10 mm	1
2420910000	CMA-31-500-5A-5VA-1	500 A	5 A	1	5 VA	25.70 mm	20 x 20 mm, 25 x 12 mm, 30 x 10 mm	1
2420900000	CMA-31-600-5A-5VA-1	600 A	5 A	1	5 VA	25.70 mm	20 x 20 mm, 25 x 12 mm, 30 x 10 mm	1
2420890000	CMA-31-750-5A-5VA-1	750 A	5 A	1	5 VA	25.70 mm	20 x 20 mm, 25 x 12 mm, 30 x 10 mm	1
2680150000	CMA-41-1000-5A-5VA-1	1000 A	5 A	1	5 VA	31.00 mm	30 x 15 mm, 40 x 10 mm	1
2680160000	CMA-51-1250-5A-5VA-1	1250 A	5 A	1	5 VA	43.00 mm	40 x 30 mm, 50 x 12 mm	1
2680170000	CMA-61-1500-5A-5VA-1	1500 A	5 A	1	5 VA	43.00 mm	50 x 30 mm, 63 x 10 mm	1
2680180000	CMA-81-2000-5A-10VA-1	2000 A	5 A	1	10 VA	54.00 mm	80 x 10 mm, 60 x 30 mm	1
2680190000	CMA-101-2500-5A-10VA-1	2500 A	5 A	1	10 VA	70.00 mm	100 x 10 mm, 80 x 30 mm	1
2680200000	CMA-31-125-5A-2,5VA-0,5	125 A	5 A	0,5	2.5 VA	25.70 mm	30 x 10 mm, 25 x 12 mm, 20 x 20 mm	1
2421030000	CMA-31-150-5A-2,5VA-0,5	150 A	5 A	0,5	2.5 VA	25.70 mm	20 x 20 mm, 25 x 12 mm, 30 x 10 mm	1
2421020000	CMA-31-200-5A-2,5VA-0,5	200 A	5 A	0,5	2.5 VA	25.70 mm	20 x 20 mm, 25 x 12 mm, 30 x 10 mm	1
1482050000	CMA-31-250-5A-5VA-0,5	250 A	5 A	0,5	5 VA	25.70 mm	20 x 20 mm, 25 x 12 mm, 30 x 10 mm	1
2420990000	CMA-31-300-5A-5VA-0,5	300 A	5 A	0,5	5 VA	25.70 mm	20 x 20 mm, 25 x 12 mm, 30 x 10 mm	1
2420980000	CMA-31-400-5A-5VA-0,5	400 A	5 A	0,5	5 VA	25.70 mm	20 x 20 mm, 25 x 12 mm, 30 x 10 mm	1
1482070000	CMA-31-500-5A-5VA-0,5	500 A	5 A	0,5	5 VA	25.70 mm	20 x 20 mm, 25 x 12 mm, 30 x 10 mm	1
2420970000	CMA-31-600-5A-5VA-0,5	600 A	5 A	0,5	5 VA	25.70 mm	20 x 20 mm, 25 x 12 mm, 30 x 10 mm	1
1482080000	CMA-31-750-5A-5VA-0,5	750 A	5 A	0,5	5 VA	25.70 mm	20 x 20 mm, 25 x 12 mm, 30 x 10 mm	1
2680210000	CMA-41-1000-5A-5VA-0,5	1000 A	5 A	0,5	5 VA	31.00 mm	30 x 15 mm, 40 x 10 mm	1
2680220000	CMA-51-1250-5A-5VA-0,5	1250 A	5 A	0,5	5 VA	43.00 mm	50 x 12 mm, 40 x 30 mm	1
2680230000	CMA-61-1500-5A-5VA-0,5	1500 A	5 A	0,5	5 VA	43.00 mm	50 x 30 mm, 63 x 10 mm	1
2680240000	CMA-81-2000-5A-10VA-0,5	2000 A	5 A	0,5	10 VA	54.00 mm	60 x 30 mm, 80 x 10 mm	1
2680250000	CMA-101-2500-5A-10VA-0,5	2500 A	5 A	0,5	10 VA	70.00 mm	100 x 10 mm, 80 x 30 mm	1
Note	For additional articles and information, refer to catalog.weidmueller.com							

CMA-41

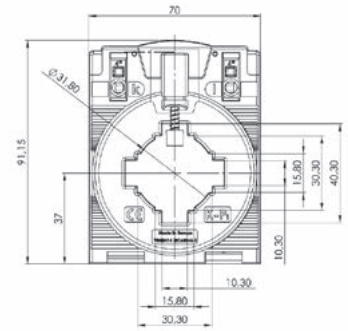

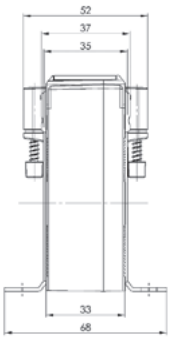

CMA-51

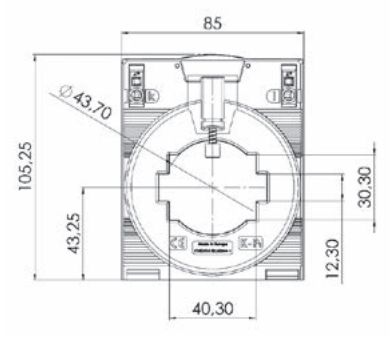

CMA-61

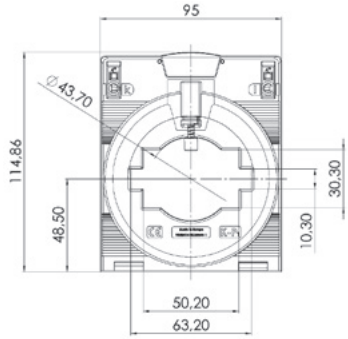

CMA-81

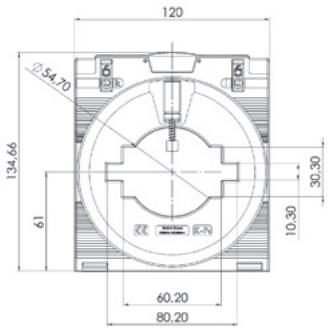

CMA-101

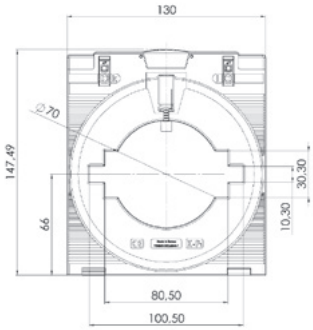

Difference current transformer (Residual Current Monitoring, RCM)

The current transformers of the CMA-RCM series are current transformers for RCM measurement on circular primary conductors. Current transformers of this series are maintenance-free and designed for the detection of residual currents of 25 A.

Ordering data

Order No.	Type	Primary current	Round conductor	Qty.
2603420000	CMA-RCM-DACT-20	25 A	20.00 mm	1
2603430000	CMA-RCM-DACT-35	25 A	35.00 mm	1
2603440000	CMA-RCM-DACT-60	25 A	60.00 mm	1
2603450000	CMA-RCM-DACT-120	25 A	120.00 mm	1
Note				

CMA-RCM-DACT-20

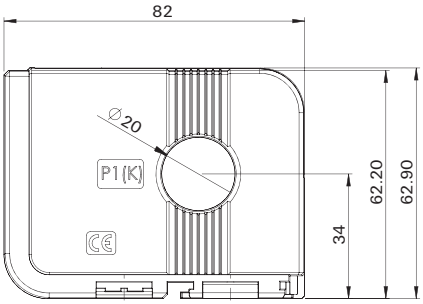

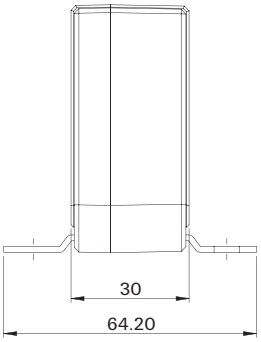

CMA-RCM-DACT-35

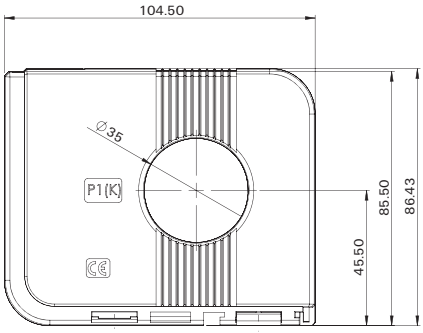

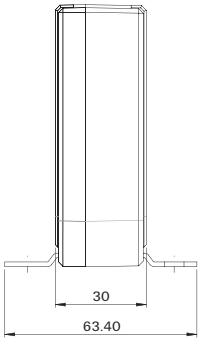

CMA-RCM-DACT-60

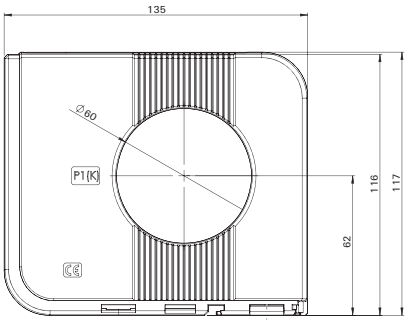

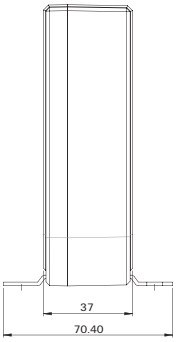

CMA-RCM-DACT-120

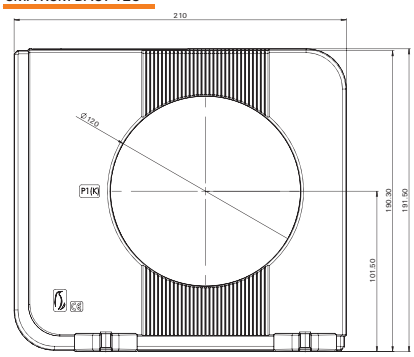

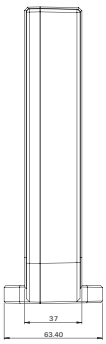

Difference current transformer (Residual Current Monitoring, RCM)

The KCMA-RCM series cable conversion current transformer is mainly used to retrofit an RCM measurement into existing systems. The KCMA-RCM measures residual currents of up to 25 A. During installation, the locking mechanism of the transformer is opened, the transformer is placed around the primary conductor and audibly re-engaged. After successful connection of the secondary conductors, the measurement setup is immediately ready for operation.

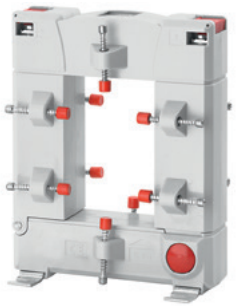

Ordering data

Order No.	Type	Primary current	Round conductor	Qty.
2656270000	KCMA-RCM-23D	18 A	20.00 mm	1
2656280000	KCMA-RCM-58D	18 A	50.00 mm	1
2656290000	KCMA-RCM-812D	18 A	80.00 mm	1
Note				

KCMA-RCM-23D

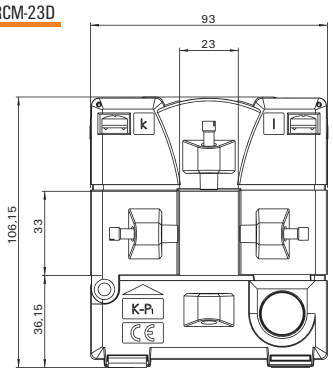

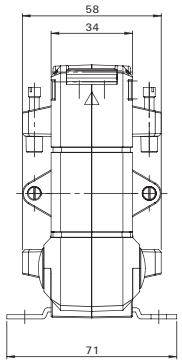

KCMA-RCM-58D

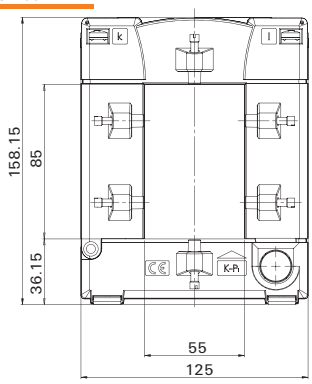

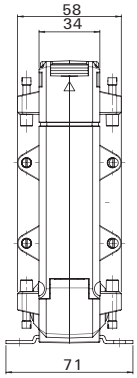

KCMA-RCM-812D

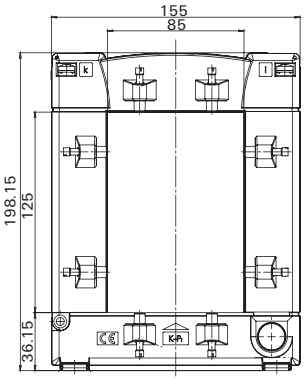

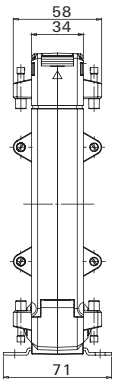

Measure energy consumption easily, safely and flexibly

Rogowski current transformer system for easy retrofitting

Growing environmental requirements are forcing companies to make the energy consumption of their existing machinery and equipment transparent. Rogowski coils are used for reliable measurement of AC currents and can be quickly and easily integrated into existing environments.

In addition to conventional current transformers, Rogowski coils can also be used for current measurement. Due to the lack of an iron core, non-linear influences of the iron core are eliminated. Rogowski coils can be easily applied and removed without breaking the circuit, i.e. without major installation work.
In contrast to current transformers, high short-circuit currents in the power distribution do not cause high losses in Rogowski coils. There can also be no saturation or remanence effects that are detrimental to the measurement. Likewise, no dangerous voltages can be generated in open circuit operation.

Our Rogowski coils can be integrated either on busbars or power cables. They are available
for three diameters between 70 and 175 mm. Their output signal is fed to a measuring transducer. This measures alternating currents or a voltage signal and can - depending on the version - output a standardized standard signal (1 A) or a signal selectable from four V or mA ranges. Twelve values between 100 A and 5,000 A can be selected for the input measuring range.

Your special advantage:

- Evaluation unit for Rogowski coils
- Linearity error below 0.1%
- 12 different current ranges from 100 to 5000A selectable
- Selection of different outputs (RCMC-5000-A0-P only): 4 true RMS outputs: 0-20 mA, 4-20 mA, 0-5 V & 010 V and 2 instantaneous voltage outputs: 0-225 mV and 0-333 mV or 1 A output

Universally applicable
Combined with our Rogowski coils, it offers a universal measurement and monitoring solution

Simple configuration and status query
Configuration possible by 2 buttons on the device. Additional LEDs indicate the status of the device

Retrofittable
DIN mounting allows easy retrofit within the control cabinet

Rogowski current transformer system

Ordering data

Order No.	Type	Diameter	Cable length	Primary current	Qty.
Rogowski coils					
2593370000	RCMA-B22-D70-1.5	70 mm	1.5 m	5000 A	1
2593340000	RCMA-B22-D70-4.5	70 mm	4.5 m	5000 A	1
2831090000	RCMA-B22-D70-6.0	70 mm	6 m	5000 A	1
2593380000	RCMA-B22-D125-1.5	125 mm	1.5 m	5000 A	1
2593350000	RCMA-B22-D125-4.5	125 mm	4.5 m	5000 A	1
2831100000	RCMA-B22-D125-6.0	125 mm	6 m	5000 A	1
2593390000	RCMA-B22-D175-1.5	175 mm	1.5 m	5000 A	1
2593360000	RCMA-B22-D175-4.5	175 mm	4.5 m	5000 A	1
2831110000	RCMA-B22-D175-6.0	175 mm	6 m	5000 A	1
2865880000	RCMA-B22-D300-6.0	300 mm	6 m	5000 A	1
Note					

Ordering data

Order No.	Type	Output current	Input measurement range	Qty.
Transmitter				
2593400000	RCMC-5000-1A-P	0...1 A AC	100 A, 200 A, 300 A, 400 A, 500 A, 600 A, 800 A, 1000 A, 1500 A, 2000 A, 4000 A, 5000 A	1
2593410000	RCMC-5000-A0-P	0...20 mA, 4...20 mA	100 A, 200 A, 300 A, 400 A, 500 A, 600 A, 800 A, 1000 A, 1500 A, 2000 A, 4000 A, 5000 A	1
Note				

Efficient implementation of testing and measurement switchgear

Current and voltage transformer wiring solutions

When installing power monitoring components, a simple defective connection can result in the destruction of current transformers or voltage converters. Our specially developed test-disconnect terminal blocks are a safe way of solving this problem. Easy to use and available with different connection technologies, they facilitate error-free and convenient wiring. This guarantees the protection of your transformers and measuring devices and ensures safe, precise work. The modular concept of our terminal blocks for transformer switchgears also saves space in the cabinet.

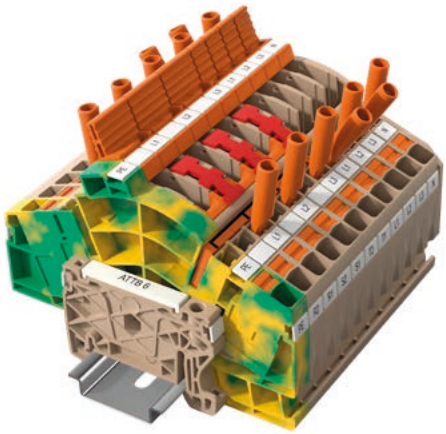

Avoiding errors through ease of use

Our test terminal blocks with tried-and-tested screw connection technology allow a large number of switching tasks to be overcome clearly and cost-effectively. The screws for the wire connection can only be accessed once the current transformer's short-circuit slider has been activated. This enhances safety as it prevents the accidental short-circuiting or opening of the converter circuit. Our pre-installed LST EM-BLOCK makes it easier to connect and short the current transformers, and is suitable for up to four phases.

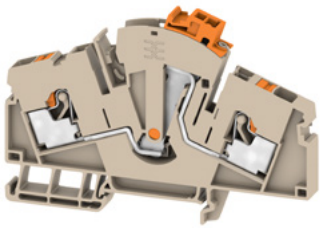

Ordering data

Type	Order No.
EM CONNECTOR CURRENT ATTB	8000100996
EM CONNECTOR VOLTAGE ATTB	8000100997

Technical data

	EM CONNECTOR VOLTAGE ATTB	EM CONNECTOR CURRENT ATTB
Connectable current transformers	4	4
Fuses for measurement voltage	3 phases	No
Fuse for supply voltage	Yes	No
Neutral conductor connection	2	No
PE connection	Yes	No
Markers	Yes	Yes

EM CONNECTOR CURRENT ATTB

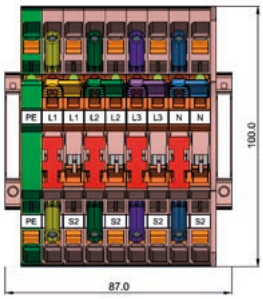

EM CONNECTOR VOLTAGE ATTB

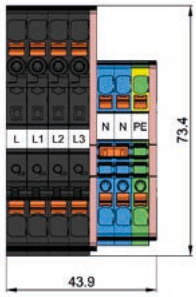

Retrofit energy solutions

Retrofit energy solutions	Introduction	F.2
	Plug&Play boxes	F.4
	Connectivity-Boxes	F.8

Convenient retrofitting of energy management systems

Ready-to-connect housings as the basis for flexible complete solutions

The Industrial IoT offers numerous opportunities to increase plant transparency, availability and efficiency. The basis for this is the communication capability of all plant components. New machines are directly equipped with the necessary sensor technology. Millions of existing plants, however, have to be retrofitted to meet the necessary requirements.

With the ready-to-connect Plug&Play boxes and the Connectivity boxes, Weidmüller provides simple and cost-effective retrofit solutions that can be installed with little effort. Various measuring devices can be integrated into the boxes to record consumption data - regardless of whether these are electrical or compressed air consumers.

In combination with Weidmüller's u-sense components, the basis is created for continuous communication of consumption data from the sensor to the cloud. This enables a transparent display of all energy consumption in a plant, which is necessary for an energy management system with the goals of increasing efficiency and reducing electricity costs.

Both housing solutions are characterized by high modularity and interface diversity. Connectivty boxes have been specially designed to meet the requirements relevant to the introduction and expansion of energy management systems.

Retrofit solutions

ready-to-connect solutions for System monitoring from Weidmüller

For electrical measured values with Modbus TCP interface

- Incl. machined housing with connections
- Incl. Connection terminal block
- Incl. Cable set
- Plus measuring device and current transformer

+ Measuring device

Three different installation types

Mounting rail

Front panel 96 mm

Front panel 144 mm

For electrical, pneumatic and temperature measured values with Modbus TCP interface

- Ready for connection incl. all ready preconfigured measuring devices

With CEE and quick coupling for compressed air

up to 16 A and 2000 l/min

up to 32 A and 2000 l/min

With CEE and external compressed air sensor

to 63 A and external sensor

For external Current transformer and external compressed air sensor

Universal with external sensors

Integrating brownfield components seamlessly into IIoT networks

Plug&Play boxes as ready-to-connect solutions for machine operators

Digitalization in production enables the use of Industrie 4.0 technologies. An important added value of Industry 4.0 is the possibility of increasing energy efficiency. Since it is estimated that more than half of all plants do not yet have sufficient communication-capable components, subsequent machine connection is necessary, especially in the brownfield. If existing machines are equipped with sensors and communication interfaces, they can continue to be used and do not have to be decommissioned due to a lack of Industrie 4.0 interfaces.

With Weidmüller's ready-to-connect plug&play boxes, you can easily integrate existing machines into your Industrial IoT network without extensive intervention in the control cabinet structures. By retrofitting, you gain transparency over the energy consumption as well as the efficiency of all machines and thus have the opportunity to effectively minimize energy costs.

With our ‚Connect Brownfield to efficiency' concept, our products become the link between your machines and the downstream control system.

The boxes thus serve as data collectors and at the same time form the basis for evaluating and transparently displaying your energy consumption. All you need is a network connection near the Plug&Play boxes.

Your special advantage:

- Integrated components for measuring energy or compressed air consumption
- Connection via standard plugs such as CEE, HDC, SAI and RJ45
- Reliable use in the field due to housing with protection class IP54
- Networking of system components directly in the field - without adjustments in the control cabinet
- Simple mounting via optional magnetic holders
- High variability due to integrated or external measuring sensors
- Integration of preconfigured measuring devices
- High data security due to built-in device memory
- Immediate data recording and display using integrated Weidmüller ecoExplorer go software

Acquisition of field data of machines and systems

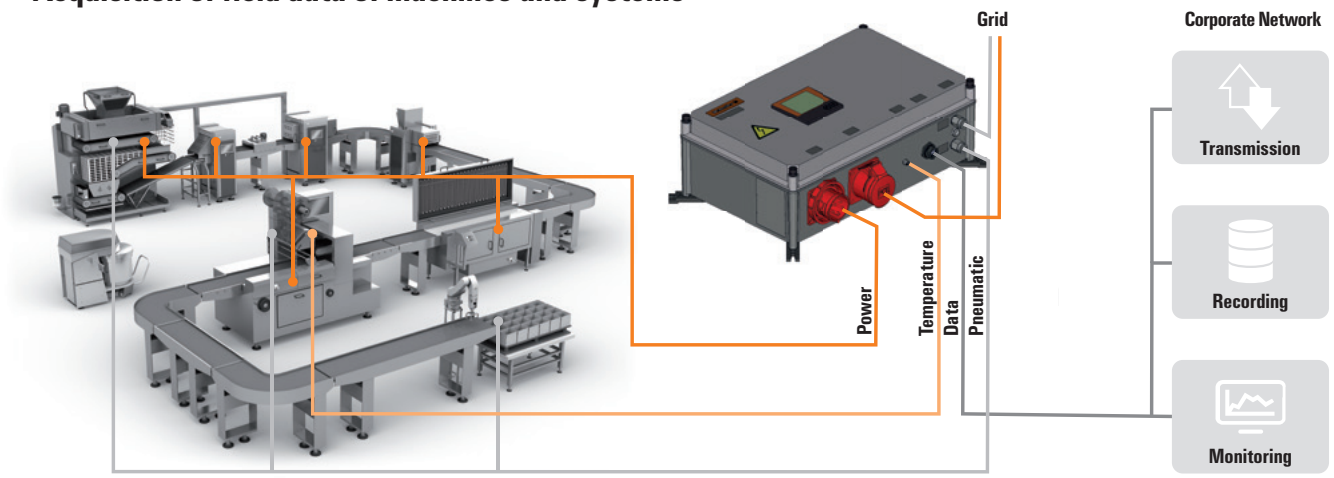

Easy mounting via optional magnetic holders

Integration of preconfigured measuring devices

Connection via standard connectors such as CEE, HDC, SAI and RJ45

Integrated components for measuring energy or compressed air consumption

Plug&Play Boxes

The Plug&Play device boxes are designed for weatherproof and stationary use. Protection class II according to IEC 60536 (VDE 0106. Part 1)

PnP-16MOD-TCP

PNP-32-MOD-TCP

Technical data

	PnP-16MOD-TCP	PNP-32-MOD-TCP
Rated current	16 A	32 A
Measurement range, voltage L-L, AC	480 V	480 V
Voltage supply	via the input measuring circuit	via the input measuring circuit
Airflow rate, min. / max.	20...2000 l/min.	20...2000 l/min.
Nominal input air pressure	8 bar	8 bar
Surge voltage category	II	II
Protection degree	IP54	IP54
Pollution severity	4	4
Air pressure (operation)	≥ 795 hPa (height ≤ 2000 m) as per DIN EN 61131-2	≥ 795 hPa (height ≤ 2000 m) as per DIN EN 61131-2
Type of mounting	Wall mounting; Connection side lying	Wall mounting; Connection side lying
Inputs / Outputs		
Temperature input	Yes	Yes
Digital output configurable	Yes	Yes
Compressed-air connection available	Yes	Yes
Type of compressed-air connection	Quick coupling for hoses with 10 mm	Quick coupling for hoses with 10 mm
Communication		
Interface	Ethernet 10/100 Base-TX (RJ-45 socket), Web server/e-mail	Ethernet 10/100 Base-TX (RJ-45 socket), Web server/e-mail
Protocol	TCP/IP, DHCP Client (BootP), Modbus/TCP (Port 502), ICMP (Ping), NTP, Modbus RTU over Ethernet (Port 8000), FTP, SNMP	TCP/IP, DHCP Client (BootP), Modbus/TCP (Port 502), ICMP (Ping), NTP, Modbus RTU over Ethernet (Port 8000), FTP, SNMP
General data		
Width / Height / Depth	530 / 340 / 225 mm	530 / 340 / 225 mm
Weight	8640 g	8940 g
Ambient temperature	0 °C...45 °C	0 °C...40 °C
Humidity	35...85 % RH (at ambient temperature)	35...85 % RH (at ambient temperature)
Note		

Ordering data

Type	Qty.	Order No.
PNP-16-MOD-TCP	1	2716650000

Note

Type	Qty.	Order No.
PNP-32-MOD-TCP	1	2716660000

PNP-63-MOD-TCP

63 A
480 V
via the input measuring circuit
...
II
IP54
4
≥ 795 hPa (height ≤ 2000 m) as per DIN EN 61131-2
Wall mounting; Connection side lying
Yes
Ethernet 10/100 Base-TX (RJ-45 socket), Web server/e-mail
TCP/IP, DHCP Client (BootP), Modbus/TCP (Port 502), ICMP (Ping), NTP, Modbus RTU over Ethernet (Port 8000), FTP, SNMP
540 / 340 / 225 mm
8900 g
-10 °C...40 °C
0...75 % RH (at ambient temperature)

Type	Qty.	Order No.
PNP-63-MOD-TCP	1	2716670000

PNP-U-MOD-TCP

via current transformer 1 A/5 A
480 V
230 V
...
II
IP54
4
≥ 795 hPa (height ≤ 2000 m) as per DIN EN 61131-2
Wall mounting; Connection side lying
Yes
Ethernet 10/100 Base-TX (RJ-45 socket), Web server/e-mail
TCP/IP, DHCP Client (BootP), Modbus/TCP (Port 502), ICMP (Ping), NTP, Modbus RTU over Ethernet (Port 8000), FTP, SNMP
550 / 340 / 225 mm
7320 g
-10 °C...45 °C
0...75 % RH (at ambient temperature)

Type	Qty.	Order No.
PNP-U-MOD-TCP	1	2716690000

Implement energy measurements simply and effectively

Maximum energy transparency for minimum cost

The EM-Connectivity-Box from Weidmüller has the perfect properties to allow really effective introduction or extension of an Energy Management system. As well as the option of flexible selection of the measuring instrument, there is also perfect coordination between all associated products, especially the enclosure and connection terminals.

The benefits at a glance

- Quicker and cheaper installation
- No significant changes required in the control cabinet or power distribution
- All the fuses, short-circuit devices, labelled cables and circuit diagrams are included
- No engineering required
- Protection class up to IP65 (EM-Connectivity-Box TS)
- Can be ordered as a standard item
- No minimum order

Flexible choice of measuring instrument
Three different designs enable a good choice from our energy measuring instruments to suit your specific needs.

High quality, assembled enclosure
Our energy measuring instruments are made from high-quality aluminium and plastic enclosures which already have all the necessary drilled holes and cut-outs.

Components marked to prevent mix-ups
All cables, terminals and connections on the measuring instrument are clearly labelled in the factory to ensure quick, correct connections.

Tried and tested Weidmüller modular terminal blocks
To enable optimum connection to our energy measuring instruments, we have specially selected a range of our tried and tested modular terminal blocks.

Easy to install current transformers
Our cable conversion current transformers are easy to fit without disconnecting the cable. Alternatively, we offer a wide range of through and clip-on current transformers.

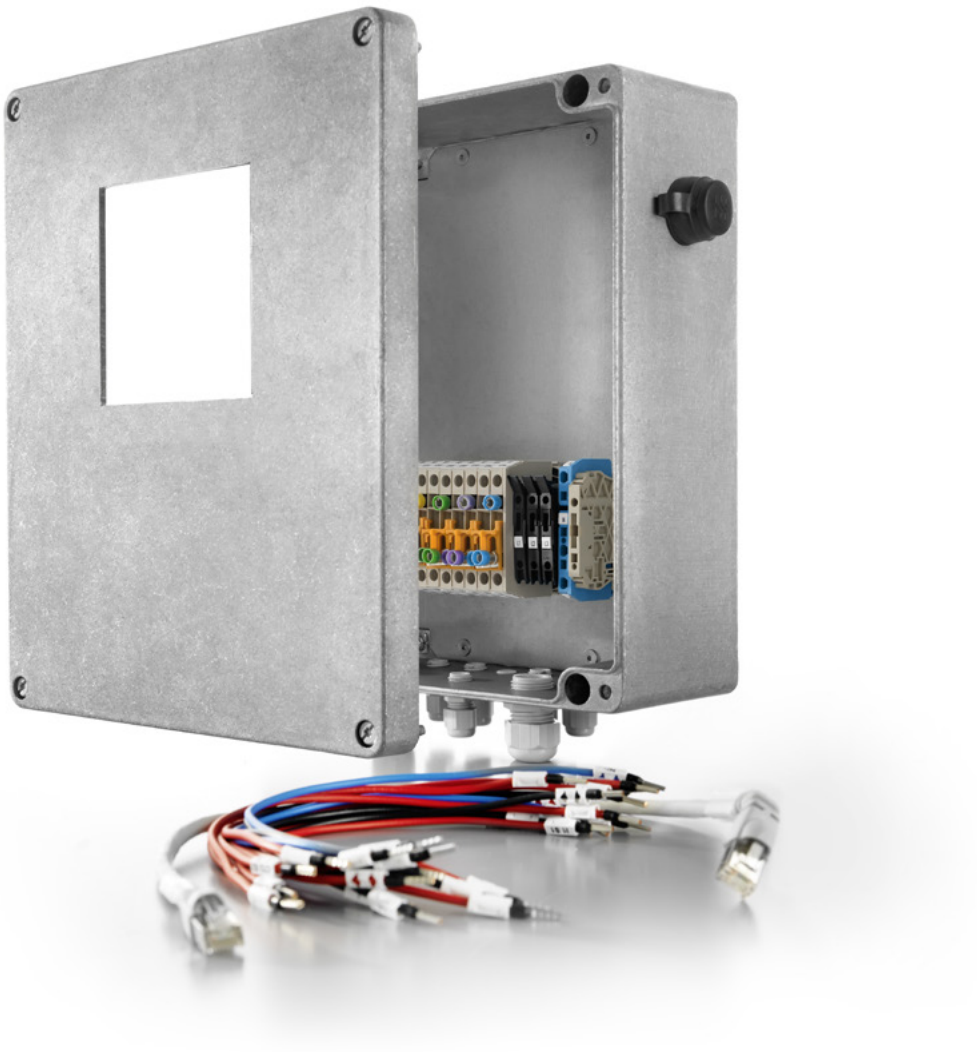

Ordering data

Type	Type of protection	Dimensions (h x w x d)	Material	Order No.
EM-Connectivity-Box 96	IP54	310 x 230 x 111 mm	Aluminium	8000028950
EM-Connectivity-Box TS	IP65	310 x 230 x 111 mm	Aluminium	8000028951
EM-Connectivity-Box 144	IP42	430 x 250 x 120 mm	Plastic	8000028952

Sensors - u-sense

Sensors - u-sense	u-sense vibration	G.2
	u-sense energy drives	G.8

Machine condition monitoring of rotating equipment with a smart sensor solution

u-sense vibration for easy retrofitting as a wireless IIoT solution

Vibrations tell us a lot about the condition of a machine. For example, they can indicate early signs of obvious wear. With u-sense vibration, unusual vibrations can be reliably detected.

u-sense vibration is a compact sensor for monitoring the condition of machines. It was designed especially for continuously running pumps and drives. Thanks to a battery power supply, wireless data transmission and IP66 protection, u-sense vibration is ideally suited for retrofitting in the field. Together with the Weidmüller Gateway IoT-GW30, the data collected by the sensor can be temporarily stored, visualised, and transferred to a cloud or local system.

The unique advantages:

- Wireless vibration sensor as easy retrofit for machine monitoring
- Processing of acceleration data in time and frequency domain
- Data transmission to cloud and on-premise systems via IoT-GW30 gateway
- IP66 protection for harsh environments
- Approved for hazardous areas up to zone 2
- Variable mounting with M8 screw connection or mounting adaptor

Vibration analysis according to DIN ISO 20816
u-sense vibration supports signal analysis in the time and frequency domain and complies with DIN ISO 20816 for measuring and evaluating vibrations.

Variable mounting
Various mounting options, either via M8 screw connections or via mounting adapters, give the greatest possible flexibility.

Perfect for retrofitting
Completely wireless installation due to data transmission via Bluetooth Low Energy (BLE) 5.0 and power supply via lithium-ion battery. High protection according to IP66 for use in harsh environments.

Sensor

US67-V1T-BLE

Technical data

General data	
Diameter	66 mm
Height	55.5 mm
Air pressure (operation)	≥ 795 hPa (height ≤ 2000 m) as per DIN EN 61131-2
Protection degree	IP66
Sensor data vibration	
Monitored value	Acceleration
Monitoring	Vibration monitoring acc. to DIN ISO 10816
Type of sensor	tri-axial MEMS
Accuracy	At 80 Hz, 1,0% Full Scale At 400 Hz 5,0% Full Scale, at 25°C
Sensor data temperature	
Monitored value	Temperature
Type of sensor	Temperature MEMS
Measured temperature value, min.	-20 °C
Measured temperature value, max.	80 °C
Accuracy	+/- 1 °C
Communication	
Communication range, max., line-of sight	90 m
Communication range, max., in shop floor	30 m
Bluetooth module	Bluetooth 5.0 Low Energy
Power supply	
Battery	AA
Battery voltage	3.6 V
Battery capacity	2.2 Ah
Battery lifetime	>2 years depending on the transmission interval and the operating temperature
Insulation coordination	
Surge voltage category	II
Rated voltage	50 V secondary circuits
Pollution severity	2
Enclosure	
Cover material	PC-ABS
Socket material	Stainless steel
Installation	
Type of mounting machine	Adhesive mounting, via M8 screw or adapter,socket with hexagon nut SW 22
Type of mounting sensor	Screwing
Mounting thread	M8
Note	

Ordering data

Type	Qty.	Order No.
US67-V1T-BLE	1	**2751260000**

Note

Battery

US67-BAT-COSL

Technical data

General data	
Diameter	14.7 mm
Height	52.5 mm
Battery voltage	3.6 V
Battery capacity	2.2 Ah
Battery lifetime	>2 years depending on the transmission interval and the operating temperature
Battery type	AA
Note	

Ordering data

Type	Qty.	Order No.
US67-BAT-COSL	1	**2757620000**

Note

Adapter plate

US67-PLATE64-STD

Technical data

General data	
Diameter	64 mm
Height	11.5 mm
Type of mounting machine	Adhesive mounting
Type of mounting sensor	Screwing
Note	

Ordering data

Type	Qty.	Order No.
US67-PLATE64-STD	1	**2811910000**

Note

Bluetooth Stick

US67-USB-STICK-BLE

Technical data

General data	
Height	16 mm
Width	11 mm
Length	43 mm
Bluetooth module	Bluetooth 5.0 Low Energy
Antenna characteristics	integrated
Note	

Ordering data

Type	Qty.	Order No.
US67-USB-STICK-BLE		2874720000

Note

Gateways for the field application

FP IOT MD01 xxx S2 00000

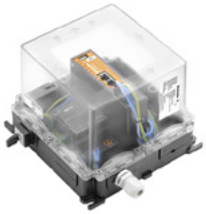

Technical data

General data	
Type of mounting	Screw mounting, Wall mounting
Protection degree	IP54
Voltage supply	24 V DC
Speed	Fast Ethernet
USB port	1x USB 2.0 (Type A; max. 500 mA)
Note	

Ordering data

Type	Qty.	Order No.
FP IOT MD01 LAN S2 00000	1	8000058603
FP IOT MD01 4EU S2 00000	1	8000058270

Note

Gateways for the cabinet

IOT-GW30

Technical data

General data	
Type of mounting	DIN rail
Protection degree	IP20
Voltage supply	24 V DC
Speed	Fast Ethernet
USB port	1x USB 2.0 (Type A; max. 500 mA)
Note	

Ordering data

Type	Qty.	Order No.
IOT-GW30	1	2682620000
IOT-GW30-4G-EU	1	2682630000

Note

Smart condition monitoring of motors with u-sense

The IIoT solution for easy retrofitting of almost any drive

In existing plants, machines such as pumps, fans, compressors and conveyors are usually driven by simple asynchronous motors without a connection to the Industrial Internet of Things (IIoT). u-sense enables the retrofit integration of these drives into the IIoT environment.

u-sense energy drives is an industrial solution for providing electrical data. It can be easily integrated into existing systems and takes all connection variants of electric motors into account. Due to a smart pre-processing unit, u-sense provides all data required for monitoring or predictive maintenance. In combination with downstream analytics software, errors can be identified automatically and appropriate actions can be recommended.

The unique advantages:

- A quickly installed retrofit solution with integrated data pre-processing
- Data collection for star and star-delta motors
- Additional inputs for analogue and digital sensors
- Brake and temperature lines can be routed through when using hybrid cabling

Comprehensive motor monitoring
The integrated pre-processing unit provides all important data on the connected motor, such as status, switching cycles, starting behaviour, rated current and voltage, active and reactive power, deviation between phases, and much more.

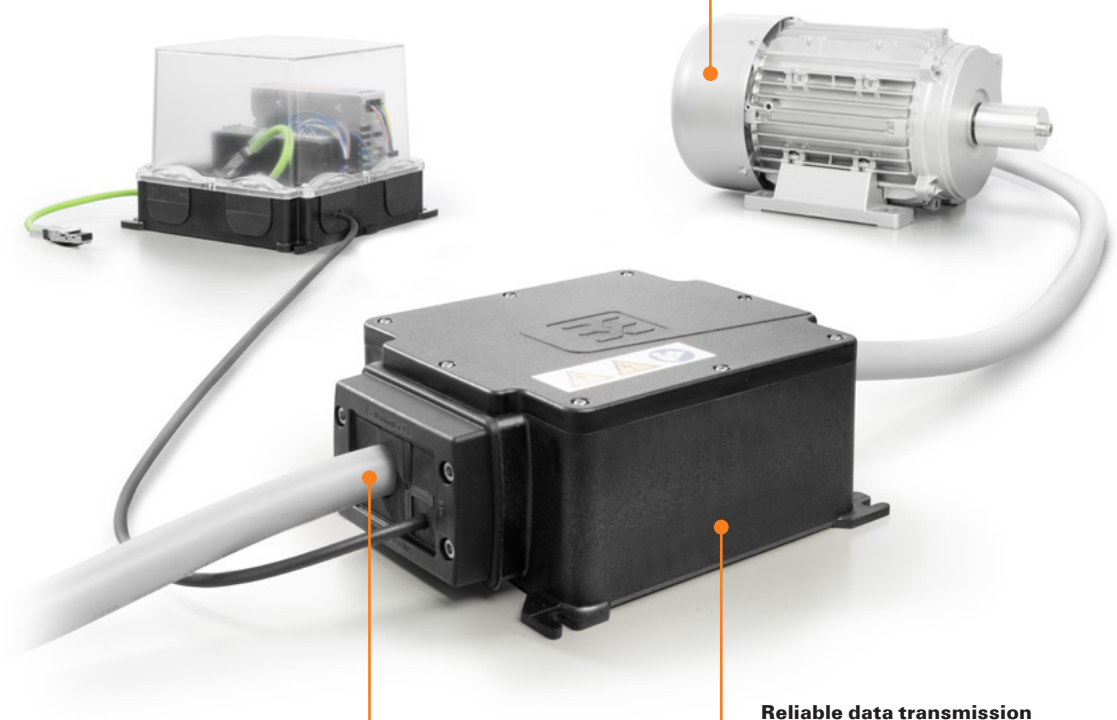

Comprehensive motor monitoring
The integrated pre-processing unit provides all important data on the connected motor, such as status, switching cycles, starting behaviour, rated current and voltage, active and reactive power, deviation between phases, and much more.

Reliable data transmission
The IIoT integration is realised via Modbus. Visualisation and data conversion can be performed via other Weidmüller products. This means that the measured values can be displayed and used via PC, smartphone, or tablet regardless of location.

u-sense energy drives

Coming soon

IE-UD50KW-MODBUS-W

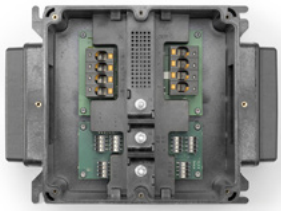

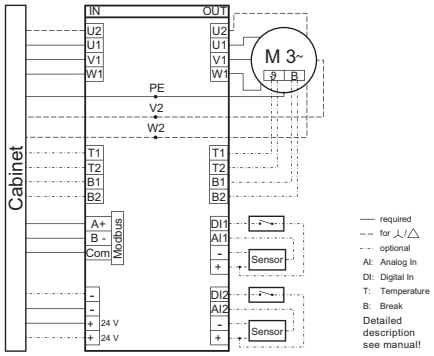

Technical data

Protection degree	IP65
Shock and vibration proof according to	5 g 60 Hz
Insulation voltage	500 V DC
Operating altitude	≤ 2000 m
Device parameters	
Interface	RS485
Protocol	Modbus RTU
Type of connection	PUSH IN
Data rate	115.2 kBaud
Clamping range min. / max.	0.13mm²...1.5mm²
Connector cross-section AWG	AWG 14...AWG 28
Power supply	
Supply voltage	24V
Voltage type	DC
Tolerance	20 %
Type of connection	PUSH IN
Clamping range min. / max.	0.13mm²...0.5mm²
Connector cross-section AWG	AWG 14...AWG 28
Loop through temperature/brake sensor	
Rated voltage with 1 phase	300V
Rated voltage with 3 phases	480V
Rated current	30A
Type of connection	PUSH IN
Clamping range min. / max.	0.5mm²...16mm²
Connector cross-section AWG	AWG 4...AWG 18
Bandwidth	2kHz
Measuring accuracy for voltage	3%
Measuring accuracy for current	4%
Loop through motor connection	
Clamping range min. / max.	0.1mm²...0.1mm²
Stud size for spade connection	M 5
Type of connection	Screw connection
INPUT/OUTPUT temperature/brake	
Type of connection	PUSH IN
Clamping range min. / max.	0.13mm²...0.5mm²
Connector cross-section AWG	AWG 14...AWG 28
INPUT digital/analog	
Connection information digital inputs	0 V / 24 V PNP input
Connection information analogue inputs	configurable 0-10 V; 0-20 mA
Type of connection	PUSH IN
Clamping range min. / max.	0.13mm²...0.5mm²
Connector cross-section AWG	AWG 14...AWG 28
Output parameters	
Output parameters	Current eff each phase (A), Voltage eff each phase (V), Phase angle each phase (°), Energy consumption (kWh), Active power (calculated) (kW), Frequency of voltage (Hz), Switch on - Switch off cycles (Integer), Operating hours (10 h), Start up current (A), Start up time (s), Analog U/I (V/mA), Digital on/off, Device identification
Note	Further technical data can be found at catalog.weidmueller.com

Ordering data

Type	Qty.	Order No.
IE-UD50KW-MODBUS-W	1	2739330000
Note		

A comprehensive automation portfolio

A comprehensive automation portfolio	Introduction	H.2
	I/O system - u-remote	H.4
	Control - u-control	H.12
	Web Panels - u-view	H.18
	Industrial PCs - u-view	H.20
	IoT-Gateway	H.22

For optimal automation
From data collection to data communication

To be able to benefit as much as possible from automated processes, you need products and solutions that are tailored to each other. Data needs to be recorded correctly, processed reliably, and transmitted without losses. We offer a comprehensive product portfolio so that all of these processes work perfectly with each other. It covers all areas from data collection to data pre-processing and data communication. We can also help you to generate real added value from your data. We will support you in choosing the right hardware and software systems so that you can optimally analyse and use your data. This means that the ideal solution for any application is just waiting for you.

Over the next pages, we'll present a small extract from our automation portfolio, which optimally supports our solutions for energy management systems. Get an overview of our I/O systems and controllers, learn about our industrial PCs, and find out more about our IoT gateway, the basis for your applications in the Industrial IoT.

More information in Catalogue 10: Automation and Software Tools

www.weidmueller.de/service

Worldwide usage in different applications and different industries
Weidmüller Industrial Ethernet components are the perfect link for data communication between Ethernet enabled devices in industrial automation. By supporting various topologies and protocols, they can be used in many industrial applications.
As a complete provider of industrial network infrastructure for machine and equipment manufacture, we offer a wide range of switch products to suit the individual needs of our customers. In particular, Gigabit switches (unmanaged and managed) and media converters, Power-over-Ethernet switches, WLAN devices and serial/Ethernet converters to meet the highest requirements and provide a reliable and flexible Ethernet communication. An extensive passive product portfolio consisting of RJ 45 and fibre optic connectors and cables make Weidmüller your partner for industrial Ethernet solutions.

Optimum power supply for automation technology
The switch-mode power supplies feature a high efficiency, compact dimensions and minimal heat generation. They are an excellent and reliable solution for providing power in all automation applications – safely providing 24 V DC voltage. The different product series are optimised for the automation industry: they feature Ex approvals for the processing industry, a flat shape perfect for distribution tasks within buildings and provide decentralised control voltages. All-purpose usage: with a wide range of AC/DC inputs, single-, double- or three-phase versions and a wide temperature range. Additional performance increases are possible using simple parallel connection. Weidmüller switch-mode power supplies are reliable usable for all applications because of their high efficiency and their resistance to both short circuits and overloads.
Weidmüller offers a system of one- and three-phase switchmode power supplies especially for the PROtop family.

Powerful Analogue signal conditioning
Considering the increase of automation, isolating amplifiers are required which convert, isolate, monitor, protect and visualise your digital and analogue signal values from industrial and process automation, e.g. temperature, pressure, level, flow volumes, weight, and speed.
Our signal converters for DC standard signals, 4-20 m A and 0-10 V isolating amplifiers, switching amplifiers, frequency converters, and threshold switches are characterised by a high level of accuracy, universality and a wide assortment of variants.

Achieving maximum efficiency in the control cabinet

With great savings potential and optimum system performance

u-remote from Weidmüller is the reliable interface between field bus and field level in automation. The modular system is based on various components: a fieldbus coupler, up to 64 I/O modules, optional power-feed modules and a wealth of accessories, such as markers and terminating elements.

The fieldbus coupler is the central link between the various field bus standards and the u-remote system bus. At the same time, up to 64 I/O modules are supplied via its integrated power contacts. The well-engineered technology of the connection system enables 2 x 10 A to be supplied for the input and output modules and the system voltage to be fully supplied through the fieldbus coupler. Every fieldbus coupler provides direct access to the u-remote system via a web server without additional software having to be installed. This means that the system can be parameterised and its configuration checked. Inputs and outputs can also be checked or influenced. The connection may take the form of an Ethernet-based field bus or micro USB. The u-remote fieldbus couplers are integrated in the standard simple manner. The corresponding development environments of the control systems and the device description files available online, e.g. GSD, ESD, EDS oder XML, can be used to easily perform the necessary settings.

The modularly structured I/O modules are unique in that they allow the sensor and actuator wiring to be designed in both a robust and plug-in manner. This allows the electronics to be replaced at any time even with permanent wiring. This achieves an invaluable time saving, in terms of both wiring inaccessible cabinets and rapidly replacing sensors. Thanks to the “PUSH IN” technology for up to 1.5 mm², in their narrowest form of 11.5 mm, the modularly structured u-remote I/O modules can be used for all sensor and actuator connections with a very high connection density. A clear status and diagnosis display on the connection also ensures rapid and precise checks for individual sensors and actuators.

Why waste space?
Design your cabinets one size smaller: u-remote, with the highest connection density on a module, offers you the most slender module width and a far lower space requirement for power-feed modules - an unrivaled channel density and extremely flexible design options.

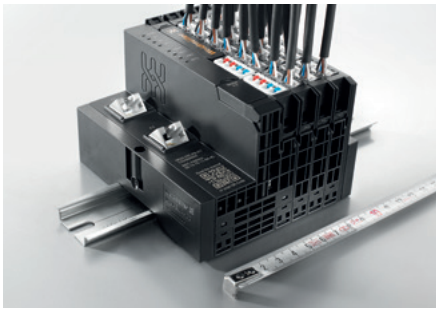

Simply plug and go
The plug-in connection level allows sensors and actuators to be connected with pre-assembled cables. This means improved time benefits, better handling, and minimises the number of mistakes in system wiring.

Diagnostics, even without a control connection
u-remote simplifies machine commissioning section-by-section and accelerates maintenance work with its integrated web server. Thanks to the high performance diagnostic tool, you can simulate the functionality of inputs and outputs prior to control connection.
You can conduct plain text error analyses using any standard browser – whether you're working on-site or remotely.

Intelligently separated
u-remote separates the supply for inputs and outputs using two 10 A current paths which are able to withstand high loads. High productivity translates into fewer power-feed modules and therefore more space and less planning.

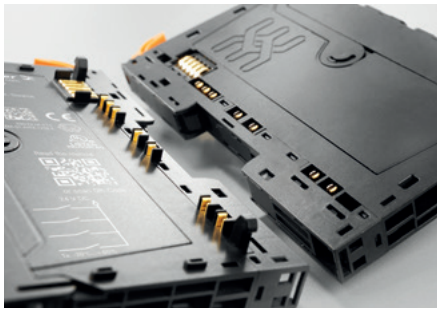

ModbusTCP fieldbus coupler

Web server tool, two RJ45 Ports, 10/100 Mbit/s

ModbusTCP

System safety around the globe is provided by the ModbusTCP version, which is stated in IEC 61158 as an Industrial Ethernet Standard. The UR20-FBC-MOD-TCP-V2 from Weidmüller is a field bus coupler designed in accordance with IEC 61158. With options for connecting up to 64 u-remote participants, it serves as the head module for the u-remote system bus.

The coupler can be activated with a system-independent web server application via the USB service interface or the Ethernet ports. All information, such as diagnoses, status values and parameters, can therefore be read out. All connected inputs can also be simulated or outputs set. The system's initial power supply is already integrated in the field bus coupler. Power is supplied via two 4-pin connectors, separated into the input and output current paths.

Since the ModbusTCP products from Weidmüller make full use of all the latest technological possibilities, such as diagnosis options, they actively support your application in the most important tasks – from engineering and commissioning to fault diagnosis.

Block diagram Modbus TCP fieldbus coupler

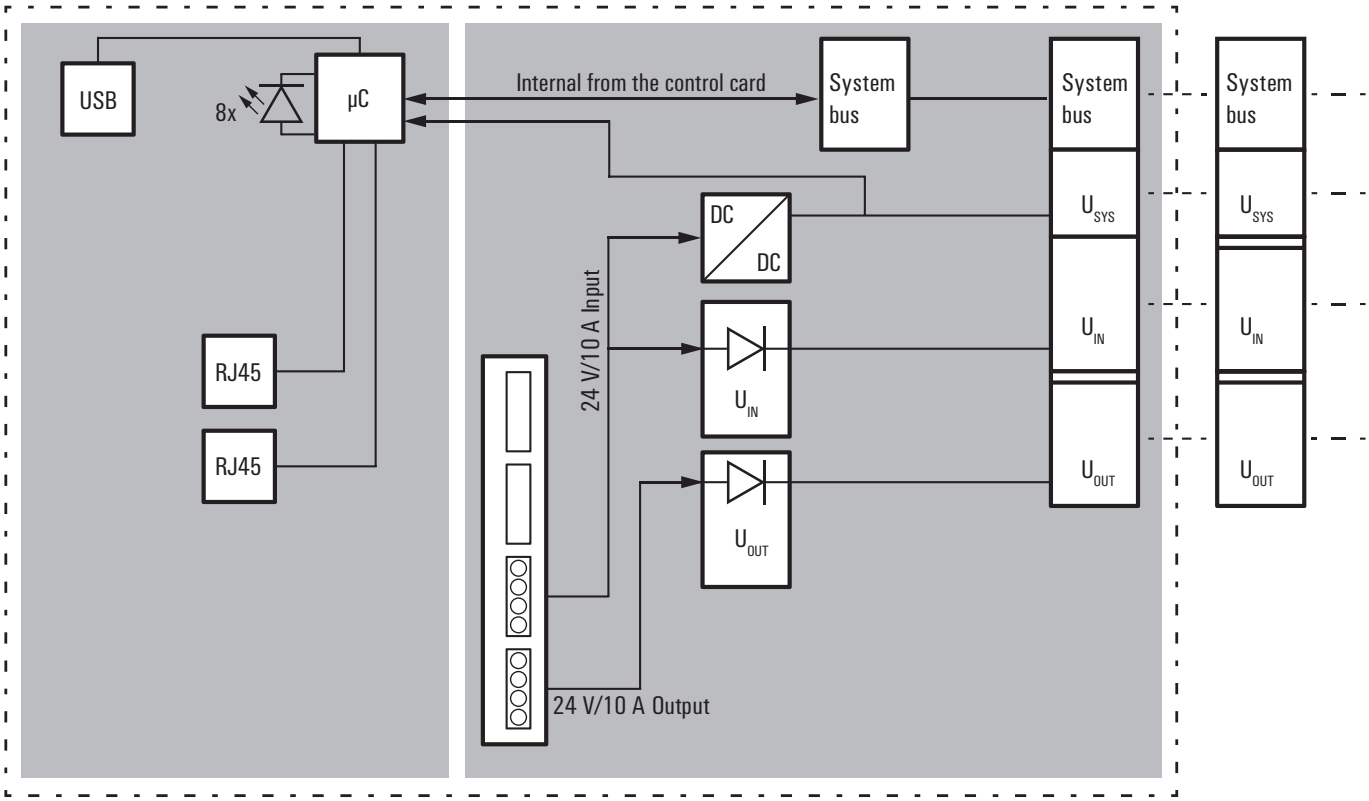

ModbusTCP

- Dual LAN mode
- 2 x 10 A current path
- Various Modbus services
- Web server
- System supply for 64 I/O modules
- Temperature range: -20... +60 °C

UR20-FBC-MOD-TCP-V2

Technical data

System data	
Connection type	2x RJ45 plug-in connectors
Field bus protocol	Modbus/TCP
Process data	1 kByte
Parameter data	1024 Byte
Diagnostic data	1024 Byte
max. number of modules	64
Configuration interface	Micro USB 2.0
Transmission rate of field bus, max.	100 Mbit/s
Transmission speed of system bus, max.	48 Mbit/s
Supply	
Supply voltage for inputs	24 V DC +20 %/ -15 %
Supply voltage for outputs	24 V DC +20 %/ -15 %
Feed current for I_{IN} (input current path) , max.	10 A
Feed current for I_{OUT} (output current path) , max.	10 A
Current consumption I_{IN} (power segment of the field bus coupler), typ.	112 mA
General data	
Weight	223 g
Dimensions H x W x D	120 mm / 52 mm / 76 mm
Note	

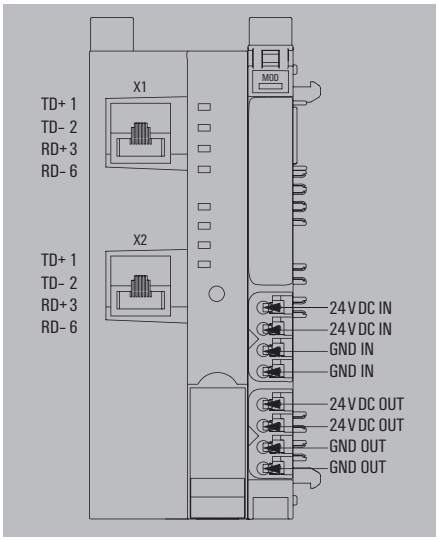

Ordering data

Module variants	Type	Qty.	Order No.
Fieldbus coupler, ModbusTCP	UR20-FBC-MOD-TCP-V2	1	2476450000
Note	A termination kit (UR20-EBK-ACC) is included in the coupler package		

Accessories

	Type	Qty.	Order No.
Termination kit	UR20-EBK-ACC	5	1346610000
Swievel marker	UR20-SM-ACC	20	1339920000
Connection marker for pusher custom printing	PM 2.7/2.6 MC SDR	192	1323700000
Connection marker for pusher neutral	PM 2.7/2.6 MC NE WS	960	1323710000
Module marker for custom printing	DEK 5/8-11.5 MC SDR	100	1341610000
Module marker for neutral	DEK 5/8-11.5 MC NE WS	500	1341630000
Thermotransfer version (Material: Polyester)	THM UR20 GE	1	1429910000
Thermotransfer version (material: polyester)	THM UR20 WS	1	1429420000
Paper version for Laserprinter	ESO UR20 DIN A4 WS	10	1429430000
USB cable (USB A to Micro USB)	IE-USB-A-MICRO-1.8M	1	1487980000
Replacement parts			
Plug-in connector unit	UR20-PK-2476450000-SP	5	2485280000
Note	1 roll = 1000 labels = 1 Qty. 1 sheet = 60 labels = 1 unit		

Product standard	IEC 61131-2	
EMC	EN IEC 61000	
ATEX	EN 60079	
UL	UL 61010-2-201	
MSIP	MSIP-REM-WMG-2476450000	
CCC	available	
EAC	available	
ABS (American Bureau of Shipping)		available
BSH (Federal Maritime and Hydrographic Agency)		available
BV (Bureau Veritas)		available
DNV (Det Norske Veritas)		available
LR (Lloyd's Register)		available
RINA (Registro Italiano Navale)		available
KR (Korean Register)		available
NK (Nippon Kaiji Kyokai)		available
PRS (Polish Register of Shipping)		available
RMRoS (Russian Maritime Register of Shipping)		available
You can find the latest information online at www.weidmueller.com		

ModbusTCP fieldbus coupler ECO

Web server tool, two RJ45 Ports, 100 Mbit/s

ModbusTCP

System safety around the globe is provided by the Modbus TCP version, which is stated in IEC 61158 as an Industrial Ethernet Standard. The UR20-FBC-MOD-TCP-ECO from Weidmüller is a fieldbus coupler designed in accordance with IEC 61158. With options for connecting up to 16 u-remote participants, it serves as the head module for the u-remote system bus.

The coupler can be activated with a system-independent web server application via the Ethernet ports. All information, such as diagnoses, status values and parameters, can therefore be read out. All connected inputs can also be simulated or outputs set. The initial system power supply is already integrated in the fieldbus coupler.

ModbusTCP products from Weidmüller fully exploit all the possibilities of the technology standard, e.g. through diagnostic options. In this way, they actively support your application in the most important tasks – from engineering and commissioning to fault diagnosis.

Block diagram Modbus TCP fieldbus coupler ECO

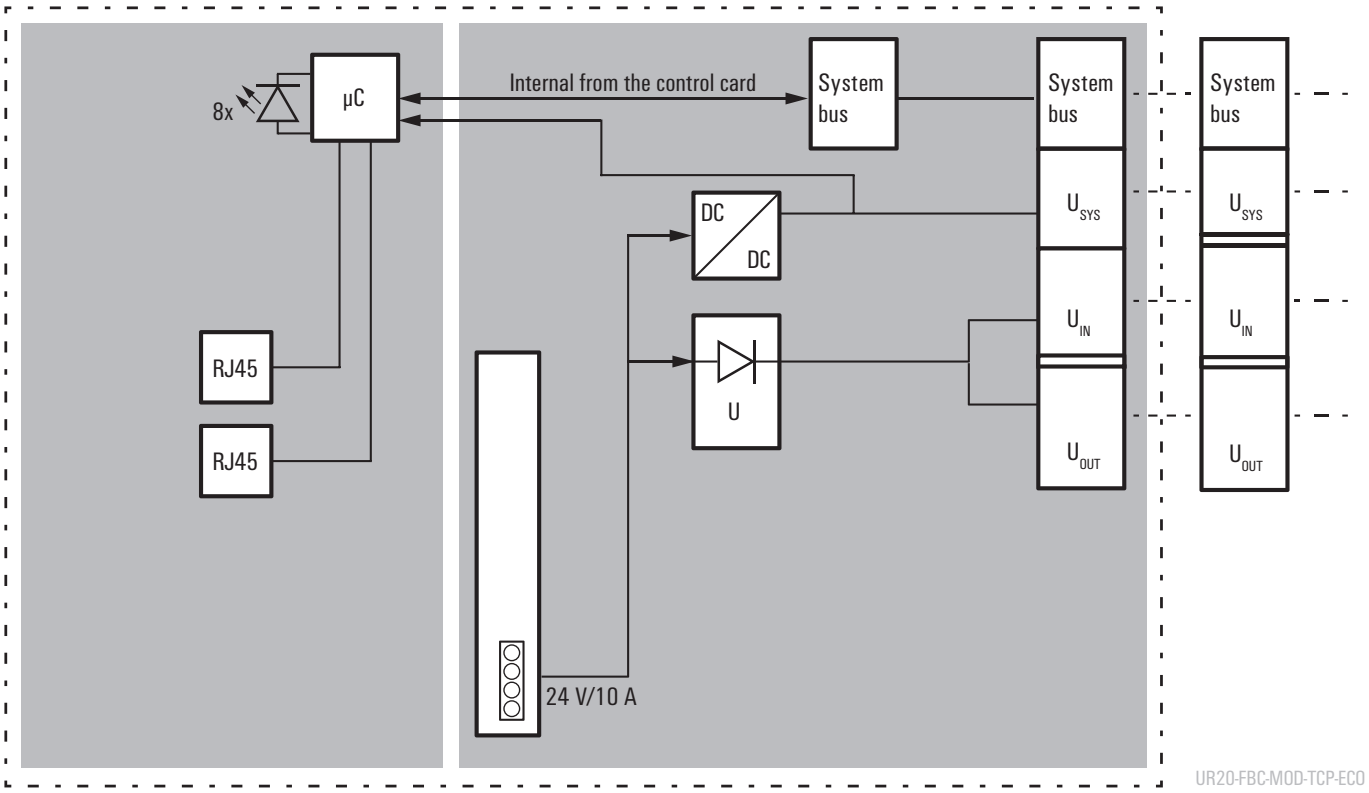

ModbusTCP ECO

- 10 A current paths
- Various Modbus services
- Web server via ethernet
- System supply of 16 I/O modules
- Temperature range 0... +50 °C

UR20-FBC-MOD-TCP-ECO

Technical data

System data	
Connection type	2x RJ45 plug-in connectors
Field bus protocol	Modbus/TCP
Process data	1 kByte
Parameter data	1 kByte
Diagnostic data	1 kByte
max. number of modules	16
Transmission rate of field bus, max.	100 Mbit/s
Transmission speed of system bus, max.	48 Mbit/s
Supply	
Voltage supply	24 V DC +20 %/ -15 %, via the system bus
Feed current for I_{IN} (input current path) , max.	10 A
Current consumption I_{IN} (power segment of the field bus coupler), typ.	80 mA
General data	
Weight	247 g
Dimensions H x W x D	120 mm / 52 mm / 76 mm
Note	

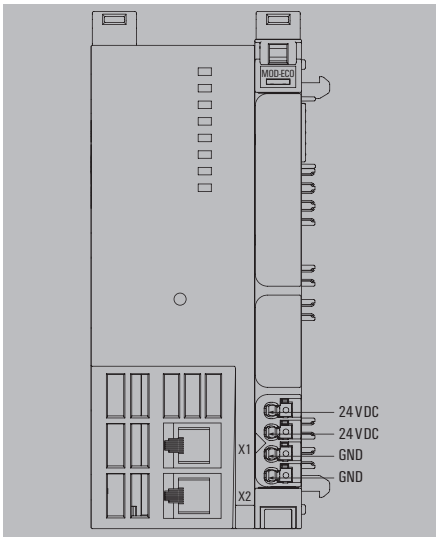

Ordering data

Module variants	Type	Qty.	Order No.
Fieldbus coupler, ModbusTCP	UR20-FBC-MOD-TCP-ECO	1	**2659700000**
Note	A termination kit (UR20-EBK-ACC) is included in the coupler package.		

Accessories

	Type	Qty.	Order No.
Termination kit	UR20-EBK-ACC	5	**1346610000**
Swievel marker	UR20-SM-ACC	20	**1339920000**
Connection marker for pusher custom printing	PM 2.7/2.6 MC SDR	192	**1323700000**
Connection marker for pusher neutral	PM 2.7/2.6 MC NE WS	960	**1323710000**
Module marker for custom printing	DEK 5/8-11.5 MC SDR	100	**1341610000**
Module marker for neutral	DEK 5/8-11.5 MC NE WS	500	**1341630000**
Thermotransfer version (Material: Polyester)	THM UR20 GE	1	**1429910000**
Thermotransfer version (material: polyester)	THM UR20 WS	1	**1429420000**
Paper version for Laserprinter	ESO UR20 DIN A4 WS	10	**1429430000**
Replacement parts			
Plug-in connector unit	UR20-PK-2659700000-SP	5	**2702610000**
Note	1 roll = 1000 labels = 1 Qty. 1 sheet = 60 labels = 1 unit		

Product standard	IEC 61131-2	
EMC	EN IEC 61000	
ATEX	not available	
UL	UL 61010-2-201	
MSIP	MSIP-REM-WMG-2659700000	
CCC	not available	
EAC	available	
ABS (American Bureau of Shipping)		not available
BSH (Federal Maritime and Hydrographic Agency)		not available
BV (Bureau Veritas)		not available
DNV (Det Norske Veritas)		not available
LR (Lloyd's Register)		not available
RINA (Registro Italiano Navale)		not available
KR (Korean Register)		not available
NK (Nippon Kaiji Kyokai)		not available
PRS (Polish Register of Shipping)		not available
RMRoS (Russian Maritime Register of Shipping)		not available
You can find the latest information online at www.weidmueller.com		

Digital input modules

P- or N-switching, Reverse polarity protection, up to 3-wire+FE

Digital input modules from Weidmüller are available in different versions and are used primarily to receive binary control signals from sensors, transmitters, switches or proximity switches. Thanks to their flexible design, they will satisfy your need for well coordinated project planning with reserve potential.

All modules are available with 4, 8 or 16 inputs and comply fully with IEC 61131-2. The digital input modules are available as P- or N-switching variant. The digital inputs are for Type 1 and Type 3 sensors in accordance with the standard. With a maximum input frequency of up to 1 kHz, they are used in many different applications. The variant for PLC interface units enables rapid cabling to the proven Weidmüller interface sub-assemblies using system cables. This ensures rapid incorporation into your overall system. Two modules with a timestamp function are able to capture binary signals and to provide a timestamp in 1 µs resolution. Further solutions are possible with the module UR20-4DI-2W-230V-AC which works with accurant current up to 230 V as an input signal.

The module electronics supply the connected sensors from the input current path (U_{IN}).

UR20-4DI-P

UR20-4DI-P-3W

UR20-8DI-P-2W

UR20-8DI-P-3W

UR20-8DI-P-3W-HD

UR20-16DI-P

UR20-16DI-P-PLC-INT

UR20-2DI-P-TS

UR20-4DI-P-TS

UR20-4DI-N

UR20-8DI-N-3W

UR20-16DI-N

UR20-16DI-N-PLC-INT

UR20-4DI-2W-230V-AC

UR20-8DI-ISO-2W

Analogue input modules

Input parameters can be set for current or voltage, up to 3-wire+FE, Accuracy 0.1% FSR

The analogue input modules can detect up to 2, 4 or 8 analogue sensors with +/-10 V, +/-5 V, 0...10 V, 0...5 V, 2...10 V, 1...5 V, 0...20 mA or 4...20 mA. Variations are available in 12 and 16 bit resolution per channel. Sensors in a 2-wire, 3-wire or 3-wire connection + FE can be connected to each plug-in connector. The measurement range is defined using parametrisation. A status LED is assigned to each channel. The inputs are protected against voltage surges and overcurrent. The module electronics supply the connected sensors from the input current path I_{IN} (The "ISO" module is an exception: the module has no auxiliary voltage outputs. Connected sensors must be supplied with power from external sources.)

"DIAG" module: the module provides individual channel diagnosis with channel-related fault messages.

"DIF" module: the input channels are differential inputs with a common-mode voltage range of +/-30 V.

"HART" module: the module can be used as a HART master, with each channel using a dedicated HART modem. HART devices can be connected to each channel in single connection (point-to-point, P2P) or multiple connection (multidrop).

The module electronics supply the connected sensors from the input current path (U_{IN}).

UR20-4AI-UI-16

UR20-4AI-UI-16-DIAG

UR20-4AI-UI-DIF-16-DIAG

UR20-4AI-UI-DIF-32-DIAG

UR20-4AI-UI-16-HD

UR20-4AI-UI-16-DIAG-HD

UR20-4AI-UI-12

UR20-8AI-I-16-HD

UR20-8AI-I-16-DIAG-HD

UR20-8AI-I-PLC-INT

UR20-2AI-UI-16

UR20-2AI-UI-16-DIAG

UR20-4AI-I-HART-16-DIAG

Flexible automation of applications

u-control 2000 for a powerful and compact control system

The powerful u-control 2000 controller is based on a compact design of the u-remote fieldbus coupler - for even greater space savings and maximum Flexibility in the implementation of individual automation solutions. It is is compatible with the u-remote portfolio and offers the possibility to I/O modules directly. Combined with our versatile Engineering tools u-create web and u-create studio unfold their full potential Range of applications.

The u-control 2000 is equipped with an Ethernet based fieldbus and a TCP/IP interface for programming. The controller also has an optional CAN interface. Optionally, communication via the Modbus TCP protocol or OPC-UA is also possible. In addition, u-control 2000 has a dual-core ARM-A9 processor and a USB service interface. In addition to the battery-buffered real-time clock, it also has a slot for a MicroSD with up to 32 GB.

In combination with the u-create software tools, u-control enables a maximum of customization.

compatible with u-create software-tools

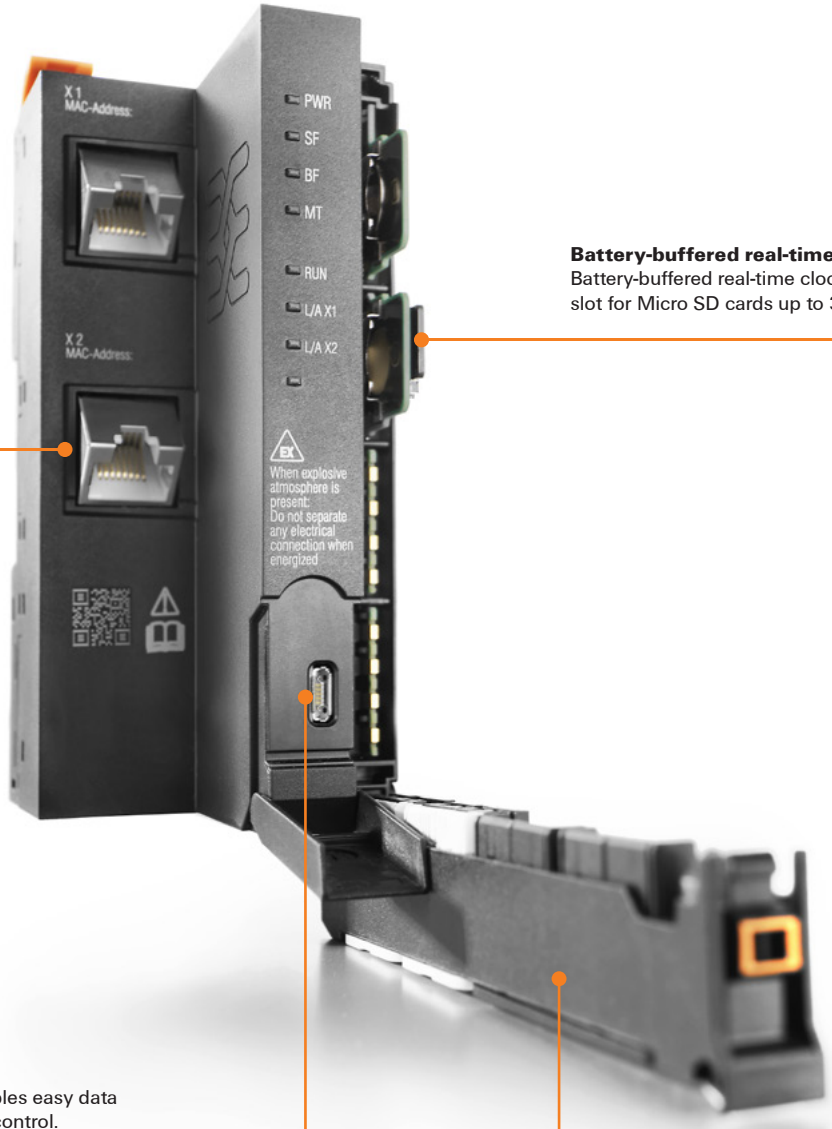

Battery-buffered real-time clock
Battery-buffered real-time clock and slot for Micro SD cards up to 32 GB.

Versatile connection options
Fitted with a fieldbus and TCP/IP interface, plus an optional CAN interface.

Simple data exchange
The micro USB interface enables easy data exchange and service of the control.

Input & output current
3 separate current paths for system bus, as well as input current and output current path.

UC20-SL2000-OLAC-EC

- OpenLinux automation controller
- Engineering tool u-create studio
- System supply of 64 I/O modules
- Configurable as EtherCAT master
- 2 x 5 A current path

UC20-SL2000-OLAC-EC

Technical data

System data	
Connection type	2 x RJ45 plug-in connectors
max. number of modules	64
Configuration interface	Micro USB 2.0
Processor	Dual Core ARM Cortex A9, 624 MHz, 512 Mbyte RAM
Memory (Flash)	4 GB, 32 GB via microSD
Real-time clock	Battery buffered
Engineering tool	u-create studio
Field bus protocol	EtherCAT
Supply	
Supply voltage for inputs	24 V DC +20 %/ -15 %
Supply voltage for outputs	24 V DC +20 %/ -15 %
Feed current for I_{IN} (input current path) , max.	5 A
Feed current for I_{OUT} (output current path) , max.	5 A
Current consumption I_{IN} (power segment of the field bus coupler), typ.	116 mA
General data	
Weight	250 g
Dimensions H x W x D	120 mm / 52 mm / 76 mm
Note	

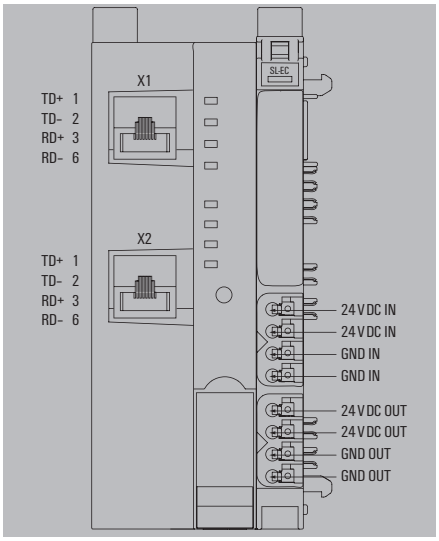

Ordering data

Module variants	Type	Qty.	Order No.
OpenLinux automation controller (Studio engineering)	UC20-SL2000-OLAC-EC	1	2638920000
Note	A termination kit (UC20-EBK-ACC) is included in the controller package.		

Accessories

	Type	Qty.	Order No.
Swievel marker	UR20-SM-ACC	20	1339920000
Connection marker for pusher custom printing	PM 2.7/2.6 MC SDR	192	1323700000
Connection marker for pusher neutral	PM 2.7/2.6 MC NE WS	960	1323710000
Module marker for custom printing	DEK 5/8-11.5 MC SDR	100	1341610000
Module marker for neutral	DEK 5/8-11.5 MC NE WS	500	1341630000
Thermotransfer version (Material: Polyester)	THM UR20 GE	1	1429910000
Thermotransfer version (material: polyester)	THM UR20 WS	1	1429420000
Paper version for Laserprinter	ESO UR20 DIN A4 WS	10	1429430000
USB cable (USB A to Micro USB)	IE-USB-A-MICRO-1.8M	1	1487980000
Replacement parts			
Plug-in connector unit	UR20-PK-2674520000-SP	5	2665170000
Control hardware (replacement)	UC20-SL2000-EC	1	2674520000
Engineering software			
u-create studio engineering software	U-CREATE-STUDIO	1	2660130000
u-create studio engineering software	U-CREATE-STUDIO-ANNUAL	1	2722630000
Control accessories			
SD Memory Card	SD-CARD-8GB	1	2684400000
Battery for real-time clock	BATTERY-CR1220-3V	1	2684410000
Note	u-link licences: See catalogue 9 - Industrial Ethernet in chapter E, PROCON-WEB licences: See catalogue 10 – Automation and Software tools in chapter G		

Product standard	IEC 61131-2
EMC	IEC 61000
ATEX	EN 60079
UL	UL 121201
MSIP	Not available
CCC	Not available
EAC	Not available
ABS (American Bureau of Shipping)	Available
BSH (Federal Maritime and Hydrographic Agency)	Not available
BV (Bureau Veritas)	Available
DNV (Det Norske Veritas)	Not available
LR (Lloyd's Register)	Available
RINA (Registro Italiano Navale)	Available
KR (Korean Register)	Not available
NK (Nippon Kaiji Kyokai)	Not available
PRS (Polish Register of Shipping)	Not available
RMRoS (Russian Maritime Register of Shipping)	Not available

UC20-SL2000-OLAC-EC-CAN

UC20-SL2000-OLAC-EC-CAN

Technical data

System data	
Connection type	2x RJ45 plug-in connectors
max. number of modules	64
Configuration interface	Micro USB 2.0
Processor	Dual Core ARM Cortex A9, 624 MHz, 512 Mbyte RAM
Memory (Flash)	4 GB, 32 GB via microSD
Real-time clock	Battery buffered
Engineering tool	u-create studio
Field bus protocol	CANopen, EtherCAT
Supply	
Supply voltage for inputs	24 V DC +20 %/ -15 %
Supply voltage for outputs	24 V DC +20 %/ -15 %
Feed current for I_{IN} (input current path) , max.	5 A
Feed current for I_{OUT} (output current path) , max.	5 A
Current consumption I_{IN} (power segment of the field bus coupler), typ.	116 mA
General data	
Weight	232 g
Dimensions H x W x D	120 mm / 52 mm / 76 mm
Note	

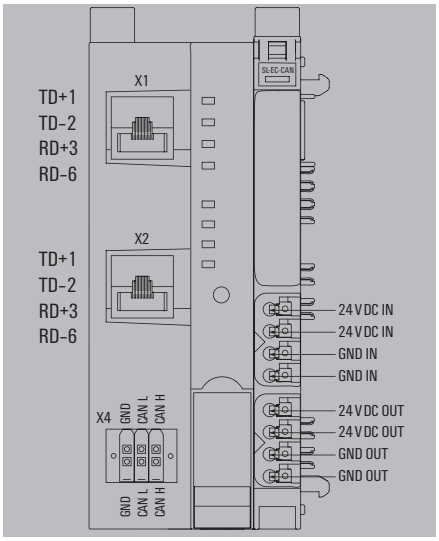

Ordering data

Module variants	Type	Qty.	Order No.
OpenLinux automation controller (Studio engineering)	UC20-SL2000-OLAC-EC-CAN	1	**2655590000**
Note	A termination kit (UC20-EBK-ACC) is included in the controller package.		

Accessories

	Type	Qty.	Order No.
Swievel marker	UR20-SM-ACC	20	**1339920000**
Connection marker for pusher custom printing	PM 2.7/2.6 MC SDR	192	**1323700000**
Connection marker for pusher neutral	PM 2.7/2.6 MC NE WS	960	**1323710000**
Module marker for custom printing	DEK 5/8-11.5 MC SDR	100	**1341610000**
Module marker for neutral	DEK 5/8-11.5 MC NE WS	500	**1341630000**
Thermotransfer version (Material: Polyester)	THM UR20 GE	1	**1429910000**
Thermotransfer version (material: polyester)	THM UR20 WS	1	**1429420000**
Paper version for Laserprinter	ESO UR20 DIN A4 WS	10	**1429430000**
USB cable (USB A to Micro USB)	IE-USB-A-MICRO-1.8M	1	**1487980000**
Replacement parts			
Plug-in connector unit	UR20-PK-2674620000-SP	5	**2570120000**
Control hardware (replacement)	UC20-SL2000-EC-CAN	1	**2674620000**
Engineering software			
u-create studio engineering software	U-CREATE-STUDIO	1	**2660130000**
u-create studio engineering software	U-CREATE-STUDIO-ANNUAL	1	**2722630000**
Control accessories			
SD Memory Card	SD-CARD-8GB	1	**2684400000**
Battery for real-time clock	BATTERY-CR1220-3V	1	**2684410000**
Note	u-link licences: See catalogue 9 - Industrial Ethernet in chapter E, PROCON-WEB licences: See catalogue 10 – Automation and Software tools in chapter G		

Product standard	IEC 61131-2
EMC	IEC 61000
ATEX	EN 60079
UL	UL 121201
MSIP	Not available
CCC	Not available
EAC	Not available
ABS (American Bureau of Shipping)	Available
BSH (Federal Maritime and Hydrographic Agency)	Not available
BV (Bureau Veritas)	Available
DNV (Det Norske Veritas)	Not available
LR (Lloyd's Register)	Available
RINA (Registro Italiano Navale)	Available
KR (Korean Register)	Not available
NK (Nippon Kaiji Kyokai)	Not available
PRS (Polish Register of Shipping)	Not available
RMRoS (Russian Maritime Register of Shipping)	Not available

UC20-WL2000-AC

- Automation controller
- Engineering tool u-create web
- System supply of 64 I/O modules
- 2 x 5 A current path

UC20-WL2000-AC

Microsoft
Azure Certified Device

Technical data

System data	
Connection type	2 x RJ45 plug-in connectors
max. number of modules	64
Configuration interface	Micro USB 2.0
Processor	Dual Core ARM Cortex A9, 624 MHz, 512 Mbyte RAM
Memory (Flash)	4 GB, 32 GB via microSD
Real-time clock	Battery buffered
Engineering tool	u-create web
Supply	
Supply voltage for inputs	24 V DC +20 %/ -15 %
Supply voltage for outputs	24 V DC +20 %/ -15 %
Feed current for I_{IN} (input current path) , max.	5 A
Feed current for I_{OUT} (output current path) , max.	5 A
Current consumption I_{IN} (power segment of the field bus coupler), typ.	116 mA
General data	
Weight	327 GRM
Dimensions H x W x D	120 mm / 52 mm / 76 mm
Note	

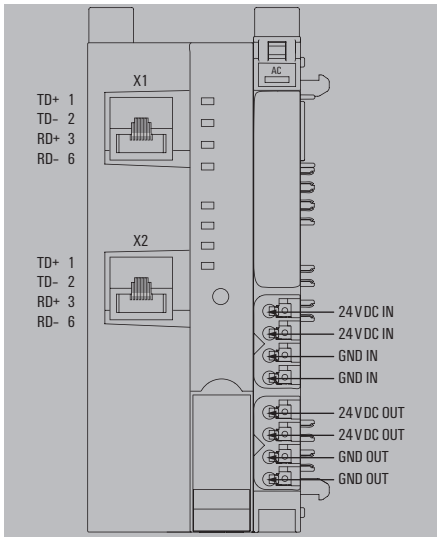

Ordering data

Module variants	Type	Qty.	Order No.
Automation controller (Web engineering)	UC20-WL2000-AC	1	**1334950000**
Note	A termination kit (UC20-EBK-ACC) is included in the controller package.		

Accessories

	Type	Qty.	Order No.
Swivel marker	UR20-SM-ACC	20	**1339920000**
Connection marker for pusher custom printing	PM 2.7/2.6 MC SDR	192	**1323700000**
Connection marker for pusher neutral	PM 2.7/2.6 MC NE WS	960	**1323710000**
Module marker for custom printing	DEK 5/8-11.5 MC SDR	100	**1341610000**
Module marker for neutral	DEK 5/8-11.5 MC NE WS	500	**1341630000**
Thermotransfer version (Material: Polyester)	THM UR20 GE	1	**1429910000**
Thermotransfer version (material: polyester)	THM UR20 WS	1	**1429420000**
Paper version for Laserprinter	ESO UR20 DIN A4 WS	10	**1429430000**
USB cable (USB A to Micro USB)	IE-USB-A-MICRO-1.8M	1	**1487980000**
Replacement parts			
Plug-in connector unit	UR20-PK-1334950000-SP	5	**2605360000**
Control accessories			
SD Memory Card	SD-CARD-8GB	1	**2684400000**
Battery for real-time clock	BATTERY-CR1220-3V	1	**2684410000**
Note	u-link licences: See catalogue 9 - Industrial Ethernet in chapter E, PROCON-WEB licences: See catalogue 10 – Automation and Software tools in chapter G		

Product standard	IEC 61131-2	
EMC	IEC 61000	
ATEX	EN 60079	
UL	UL 121201	
MSIP	Not available	
CCC	Not available	
EAC	Not available	
ABS (American Bureau of Shipping)		Available
BSH (Federal Maritime and Hydrographic Agency)		Not available
BV (Bureau Veritas)		Available
DNV (Det Norske Veritas)		Available
LR (Lloyd's Register)		Available
RINA (Registro Italiano Navale)		Available
KR (Korean Register)		Not available
NK (Nippon Kaiji Kyokai)		Not available
PRS (Polish Register of Shipping)		Not available
RMRoS (Russian Maritime Register of Shipping)		Not available

Optimum visualisation and operation

u-view web panels: brilliant pictures meet elegant, flat design

Comfortable web panels simplify the monitoring and control of machines and systems. u-view web panels from Weidmüller offer excellent image quality and can be used in an industrial environment without any restrictions.

The u-view series comprises three product lines:
- ECO (resistive web panels) in 4.3“, 7“ and 10.1“
- BASIC (resistive web panels) in 7“ and 10.1“
- ADVANCED (capacitive web panels) in 7“, 10.1“ and 15.6“

All panels offer convenient configuration options for accessing different web servers via modern browsers. This makes them ideally suitable for future-oriented web applications, especially for web-based visualisation solutions with u-create PROCON-WEB.

u-view web panels feature a particularly flat design, a robust housing and IP66 protection on the front.

Comfortable configuration
u-view web panels are quick and easy to configure and can therefore be set up intuitively.

Attractive design
All u-view web panels come with particularly flat and space-saving housings.

High compatibility
u-view web panels can be used in a wide variety of applications thanks to their modern web technology based on HTML5.

Great performance
First-class image quality and powerful processors make working with u-view web panels particularly enjoyable.

Flexible implementation of visualization, control and IoT applications

Reliable Industrial PCs for your automation

High-performance IPCs and Panel PCs enable the flexible control, operation and monitoring of machines and systems. u-view IPCs and Panel PCs from Weidmüller are known for their high reliability and are designed for state-of-the-art visualisation, control and IoT applications.

The u-view IPC and Panel PC series use the latest, passively cooled Intel® Atom™, Celeron™, and Core™ i-processors. By selecting from high-quality aluminium housings in various sizes, a wide range of interfaces, and modern operating systems, you can build IPCs that optimally fit your requirements. The Panel PCs close the gap between IPCs and HMIs by combining the high-quality display technology of u-view HMIs with the performance of state-of-the-art hardware.

Long-term available components and highest demands on processing and design make the u-view portfolio the optimal hardware for your future-oriented visualization, control and IoT applications.

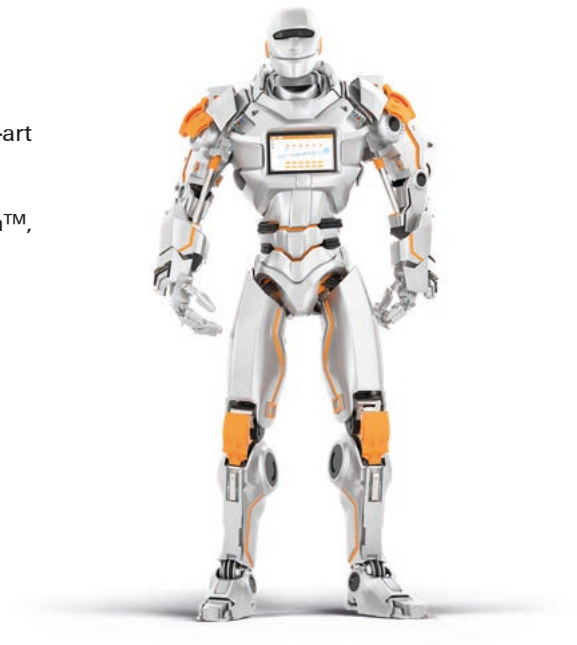

Flexible application range
u-view IPCs and Panel PCs are perfectly tailored for state-of-the-art visualization, automation and IoT applications and support Windows and Linux operating systems.

Scaleable performance
The different performance classes provide a broad selection of hardware for an optimal fit to your applications.

High-quality finish for industrial use
The sturdy aluminium housings meet the highest quality requirements and enable the passive cooling of IPCs and Panel PCs through intelligent heat management.

Integration of existing components into IoT networks

Complete application representation for the IoT gateway

In order to be able to use all the advantages of Industrial IoT, the consistent monitoring of all system components is required in addition to networking. We offer you a convenient retrofit solution which, as well as recording energy and machine data simply and with flexibility, also handles the pre-processing and storage of this data as well as its forwarding to your own IT or cloud systems via network or mobile phone. Using the gateway as an edge computer helps reduce the load on the cloud, simplify data processing and improve overall equipment effectiveness (OEE). Thanks to the combination with powerful data analysis tools such as ResMa, which are also available as cloud services, we can provide you with all the necessary system components from a single source.

The particular benefits:

- Cable savings, since the sensors are connected directly to the measuring instrument
- Ready-to-use data logger with standard Modbus interfaces
- The pre-processing of data in the gateway reduces cloud expenses

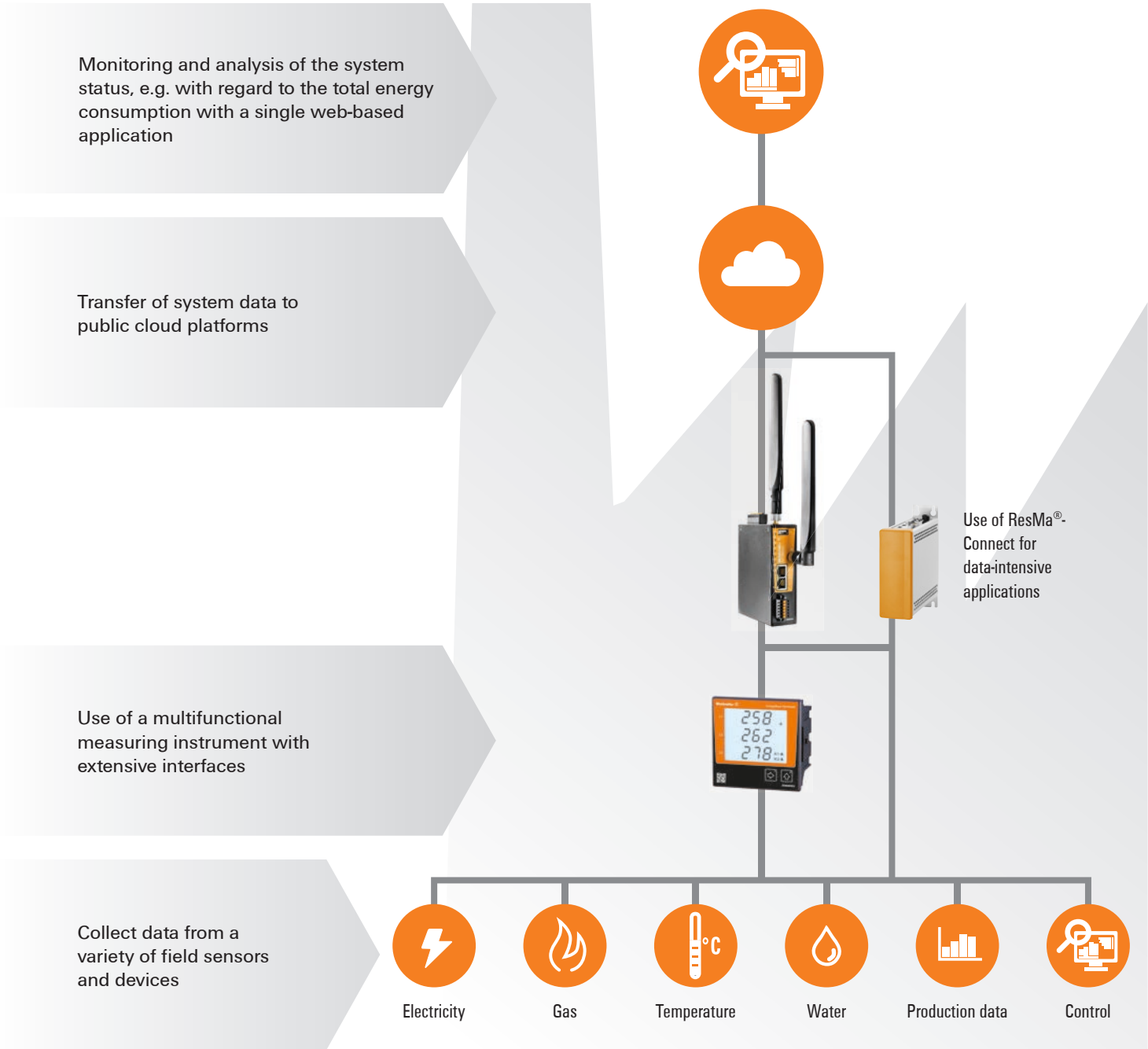

More products in our online catalogue: catalog.weidmueller.com

IoT-Gateway

- Enables machine data acquisition and provides access to field devices and PLC's via various protocols and interfaces
- interfaces to your own IT systems as well as to common cloud systems
- data traffic reduction through preprocessing on edge via the open IoT standard Node-RED
- Secure and easy remote maintenance with Weidmüller u-link remote access Service
- Integration of most common communication interfaces in small design
- D1Open programming platform Node-RED with strong community support

Technical Data

Interfaces	
Digital inputs	1x, 19.2–28 V high; max. 1 A
Digital outputs	2x, >10 V high, <3.6 V low; max. 30 V DC
Ethernet ports	2
RJ45 ports	10/100BaseT(X), auto negotiation, Full-/halfduplex mode, Auto MDI/ MDI-X port
Serial port	1x RS232/RS485
USB port	1x USB 2.0 (Type A; max. 500 mA)
System data	
Real-time clock	Capacity buffered (max. 5 days)
Processor	Dual Core ARM Cortex A9, 600 MHz
Memory (Flash)	4 GB
Memory (RAM)	1 GB, DDR3
VPN	
u-link	OpenVPN-based remote access service via the Weidmüller u-link cloud
Technical data	
Housing main material	Metall
Weight	412 g
Dimensions W x H x D	35 x 125 x 105 mm
Protection degree	IP20
Type of mounting	DIN rail
Environmental conditions	
Operating temperature, max.	60 °C
Operating temperature, min.	- 20 °C
Humidity	5 to 95 % (noncondensing)
Storage temperature, max.	85 °C
Storage temperature, min.	- 40°C
Power supply	
Supply voltage	24 V DC
Voltage supply range	Voltage type DC
	Voltage, min. 19.2 V
	Voltage, max. 28 V
Current consumption	24 DC | 0.24 A
Reverse polarity protection	Yes
Mobile radio interface (only applies for IOT-GW30-4G-EU - 2682630000)	
Frequency band	LTE: 2100MHz (B1), 1800MHz (B3), 850MHz (B5), 2600MHz (B7), 900MHz (B8), 800MHz (B20), 2600MHz (B38), 2300MHz (B40), 2600MHz (B41), UMTS/WCDMA: 2100MHz (B1), 850MHz (B5), 900MHz (B8), GSM/GPRS/EDGE: 900MHz (B8), 1800MHz (B3)
Wireless module	LTE / HSPA+ multiband wireless module (4G / 3G / 2G) for fast wireless Internet access
LTE category	CAT 4
Download rate, max.	150 Mbps
Upload rate, max.	50 Mbps

Approvals	
EMC standards	EN 61000-6-3, EN61000-6-2
Shock	according to IEC 60068-2-27
Vibration	according to IEC 60068-2-6
ROHS	Conform
Classifications	
ETIM 6.0	EC001099
ETIM 7.0	EC001099
eClass 9.0	19-17-01-00
eClass 9.1	19-17-01-00
eClass 10.0	19-17-04-90
Guarantee	
Time interval	3 years

Ordering data

Version	Type	Operating temperature	Order No.
IoT Gateway, Fast Ethernet, IP20, -20 °C...60 °C	IOT-GW30	-20 to +60 °C	**2682620000**
IoT Gateway, Fast Ethernet, IP20, -20 °C...60 °C	IOT-GW30-4G-EU	-20 to +60 °C	**2682630000**

Energy management software

Energy management software	Introduction	I.2
	ecoExplorer go – configuration software	I.4
	ResMa – process and energy optimisation	I.6

Data processing for Energy Management and energy analytics
Weidmüller Energy Suite

Data processing is becoming increasingly important in an industrial context. We are your partner for all matters relating to software application matters, and will provide you with suitable software solutions as necessary. With our comprehensive expertise, we ensure a smooth interplay in digitalised industry – from the recording of data at the field level and distribution using our industrial ethernet components through to comprehensive data processing in the fields of industrial analytics and Energy Management.

Industrial software solutions need to have a large number of specific properties in order to provide the greatest possible benefit. We will advise you on the selection and application of your software with our broad expertise. The focus for us is on the following factors:

Availability
Our high standards of quality guarantee error-free data processing, a high level of availability and long-term benefit.

Security
With all of our projects for customers we tackle the growing danger of attacks from hackers with a particularly thought-out approach. In this way we ensure the greatest possible security before, during and after implementation.

Data storage
Our software solutions allow you to reliably store data within your own network without needing to rely on cloud-based services.

Scalability
The scalability of our software solutions makes it possible to adapt the growing demands of your company at any time.

User-friendliness
Well thought-out and practical operation in the field plays a particularly important role for us. We focus on operating concepts that are tailored precisely to the location of use, and promote efficiency and productivity.

Conveniently record and clearly display measurement data

ecoExplorer go simplifies parameterisation and visualisation

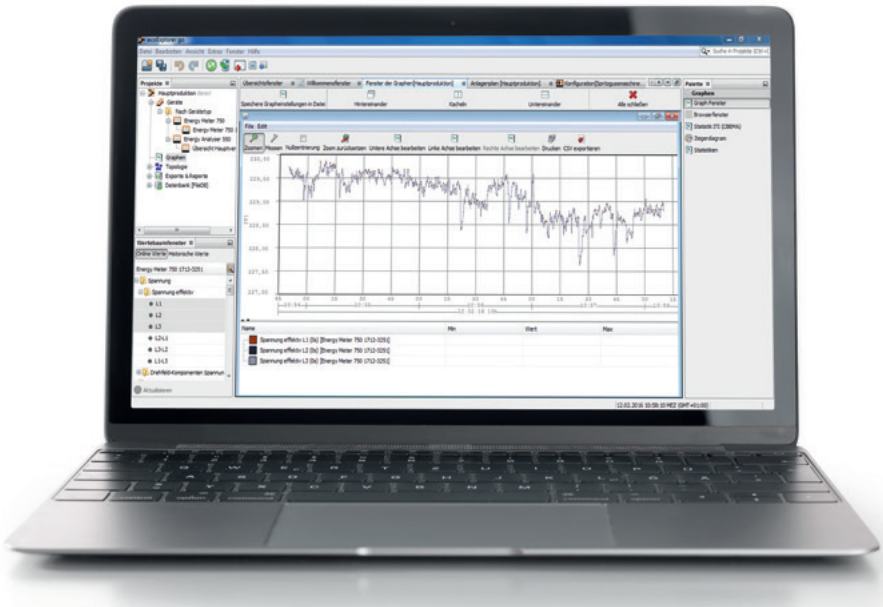

Quick commissioning
The user-friendly interface of ecoExplorer go allows quick connection and configuration of the measurement devices.

With the ecoExplorer go, you can easily create a commissioning report that can be used to carry out a connection check, thereby verifying the correct functioning of the devices.

Quick insight
For an efficient energy management, the further processing and evaluation of energy and measurement data for the power quality is of key importance. ecoExplorer go enables initial analysis of the energy grid.

Power quality report
With the ecoExplorer go and our EA750, you can monitor the voltage quality of the whole system, and with the report generator you can generate network quality reports according to PQ standards like EN 50160 or EN61000-2-4.

Hardware-Requirements	• CPU: x86_64 Dualcore, >= 2,0 GHz, >= 8 MB cache • Min. 8 GB Memory • Min. 16 GB free hard drive space (demand dependends on data retention)
Data storage	• Live visualisation of measurement data • Reading the device memory (if available) • Creation of CSV files
Fielddevice-Configuration	• Local backup of the field device configuration • Graphical configuration of Energy Meters / Energy Analysers • Management of the field device memory (when available)

We reserve the right to make technical changes.

The visualisation of energy consumers is a central principle to make production sites more efficient.

Many of our energy measurement devices have a very simple user interface for reasons of clarity to allow the display and parameterisation of the measured data directly on the device. ecoExplorer go is a PC-based software which allows you to access your devices quicker and more simply and conveniently than before. Thanks to the intuitive user interface, users can configure the measurement devices quickly and easily and display the measured data clearly.

ecoExplorer go has been tailored to the use of measurement equipment in the energy sector. This guarantees that it provides optimum performance in practice.

You can find the download for the software ecoEcplorer go here: www.weidmueller.com/ecoexplorergo

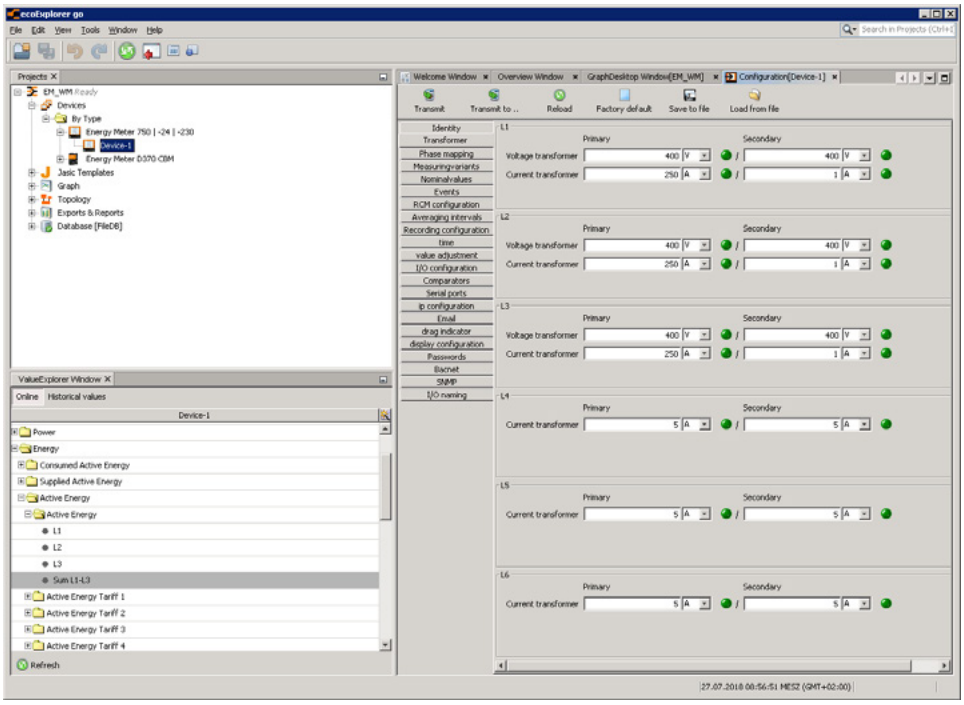

Software for process and energy optimization

Optimize your processes with the intelligent energy management that can be combined to Industrial IoT

The use of energy and resources in industrial production is a cost factor that grows with increasing automation. Resourcemanagement with IIoT supports all tasks for an efficient and transparency way to pursue your processes more sustainably and economically.

Resource management ResMa® combines the evaluation of energy and process data with IIoT platform solutions and offers a total system for consistant and analyzing machine data and using the knowledge for the optimization of processes or for new services. This makes more possible than pure energy management.

The modular and preconfigured system variants for the standard Resma® use cases enable the flexible and fast implmentation of your projects - whether in production, industry or distributed infrastructures. In addition, open interfaces allow simple and cost-effective integration into the existing IT environment. We enable you to make optimal use of your data, uncovering potential and increasing your productivity.

Your benefits at a glance

Recording of production data
The simple collection of data from different machines and systems enables the collection of production data. Thus, complex key figures can be calculated and plausibility can be configured to optimize production processes.

Reduction of costs
With our solutions, energy and process data become meaningful key figures. In this way, you not only reduce costs, but also optimize your processes, increase availability and reduce the use of resources..

Automatic reporting
For standardized reporting, individual energy reports or production-relevant evaluations can be sent automatically. In addition, the interactive documentation within the system supports the exchange of information between users

.

Real-time alerting
States, limit and setpoint values are continuously monitored and show abnormalities in real time in order to avoid running and downtimes. This information can be conveniently forwarded to users.

Simple system integration
Open to all measurement systems and easy integration of existing systems, enables uncomplicated connectivity for data exchange with ERP/MES systems or other databases.

Certified acc. to ISO 50001
DIN EN ISO 50001 compliant management certified by TÜV-Süd and listed by Bafa. Concrete measures can be documented and achieved goals can be evaluated.

A diverse system that supports you in recognizing and documenting energetic and process-based potentials and deriving measures for optimization. For this purpose, a number of special and extensive evaluation options are available.

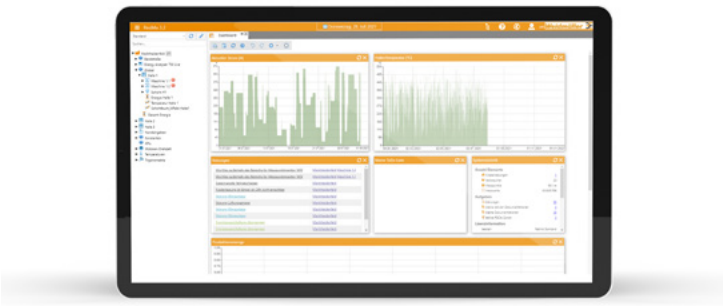

Transparency of production
Acquisition of

- Electricity, gas, water, heat, air consumption
- Order-related quantities and material input
- Machine and equipment performance

In addition, you can call up many compression values for all measured variables: Min, Max, Mean, Sum etc.

Analyze processes easily and efficiently
Detailed analysis via interactive, adaptable charts for optimal display

- Generation of meaningful key figures including production parameters
- Specific evaluations, which, in addition to the use of energy, also include the quantities of raw materials used and their quality characteristics

Less effort, more control
Automated evaluation

- Representation of energy flows via Sankey diagrams
- Use of mobile devices for fast notifications and status queries
- Central monitoring of all production halls or branches for cross-site benchmarking

ResMa® Base Package

Evaluate data - plan optimizations

Basic package for the preparation, presentation and analysis of data from the production environment

- Identification of weak points and causes with fluctuating process quality
- Documentation of the entire consumption
- Reduction of personnel expenses through standardized reporting
- Simple operability with high functionality at the same time
- Dashboards for a clearly resource and consumption overview

Optionally extend your ResMa® Base Package

ResMa® energy management package
DIN EN ISO 50001 certified energy management system

- Reduction of CO_2 emissions as a contribution to environmental protection
- Documentation of the measures carried out with the associated savings with the help of PDCA cycles
- Consideration of different tariffs for the presentation of costs
- Easier identification of new savings potentials via load distribution analyses
- Automatic reporting according to individual report templates

ResMa® production package
For a detailed analysis of machines and systems

- Increase process stability to reduce rejects and increase quality
- Reduction of the use of resources (material and energy) for cost savings
- Statistics on the causes of downtime as a basis for a cost analysis
- Increase availability and productivity to maximize profits
- Optimization of productivity through cross-site benchmarking at the product level and with order reference

Centralized monitoring of multiple locations

Gateways for cross-premises applications

By installing gateways in each site, multiple sites can be centrally monitored. Fully configured data collectors are used as IPC (IPC-PLC Connector) or as easy-to-install software (PLC Connector) for various industrial-grade hardware to record and temporarily store data from machines or energy meters on site. These are transmitted via the Internet in encrypted form to the ResMa® server. This prevents a data failure if the network, server or Internet are not available.

ResMa® IPC-PLC Connector
IPC as data collector and gateway

- Extensive selection of industrial communication protocols - Simatic S7/TIA, Beckhoff ADS, Codesys, Mitsubishi Melsec, Modbus-RTU/TCP, OPC-UA, etc.
- User friendly and easy configuration interface
- Installed on an IPC, directly for mounting in a control cabinet
- Existing energy meters can be integrated
- Encrypted transmission over the network/Internet to the ResMa® server

ResMa® PLC Connector
Docker application for embedded devices

- Resource-saving application in the form of a Docker container
- for embedded or Windows devices (from Raspberry I)
- Web interface for configuration and diagnostics
- Supports Modbus RTU/TCP and OPC-UA for pairing devices
- Also supplied together with Weidmüller u-control as an industrial-grade gateway with its own I/O connection
- Encrypted transmission over the network/Internet to the ResMa® server

Entry-level version for small applications

For smaller applications, the ResMa® Compact system variant enables a cost-effective entry into the acquisition and evaluation of measured values.

System variant ResMa® Compact

- up to 500 data points (measured variables)
- offers reduced functions of the ResMa® Base Package and the ResMa® EnMS Package
- Installation on an IPC, directly into a control cabinet
- Existing energy meters can be connected
- Additional sensors or simple control systems can be connected via Modbus

A comprehensive software portfolio

A comprehensive software portfolio	u-create PROCON-WEB embedded System	J.2
	u-create PROCON-WEB SCADA	J.4
	u-link – Remote Access & Cloud-Services	J.8
	Industrial Analytics	J.10

Future-proof visualisations for IIoT applications

u-create PROCON-WEB Embedded Systems – the platform-independent HMI software

In modern IIoT and automation applications, machine data must be available locally and in the cloud for all users. To ensure task-oriented provision and intuitive use, the relevant information needs to be collected and visually prepared.

PROCON-WEB Embedded Systems is a platform-independent visualisation solution ideally suited for use in modern IIoT applications. Due to its low system requirements, it can be integrated on all embedded devices up to the cloud level. This is enabled by container technologies, for example. The HMI is conveniently accessed via HTML5-compatible browsers and can therefore be accessed from a wide variety of end devices.

Your special advantage:

- Portable and easy-to-parametrise HMI and IIoT solution
- High performance with low resource requirements
- Compatible with devices with OPC UA server, Modbus interface, u-control and
- others. Dynamic web interface with adaptive design and customisable control elements

Many visualisation features
Predefined control elements, user and rights management, multilingualism, data recording, recipe management, alarm and message processing, and many other features make PROCON-WEB Embedded Systems versatile.

Maximum flexibility
PROCON-WEB Embedded Systems can be implemented independently of hardware and operating system. Web-based visualisation, support for mobile devices, and open communication standards increase flexibility.

Efficient project planning
Features such as the class-instance concept and automation objects with structure support speed up project planning. Scripting and customisable control elements increase flexibility for special requirements.

Ordering data

Type	Number of process variables, max.	Configurable target systems	Operating system	Order No.
PWEB-DESIGNER-ES-COMPACT	2000	Embedded Systems	Windows	Free to use
PWEB-DESIGNER-PRO	Unlimited	Embedded Systems + SCADA	Windows	2857650000

Operate machines and systems via browser interfaces

u-create PROCON-WEB SCADA – the future-proof visualisation solution

Easily scalable and platform-independent HMI and SCADA solutions can be used flexibly and make relevant machine data available everywhere. They facilitate fault processing as well as data recording and management to support the control of complex processes.

PROCON-WEB SCADA simplifies the project planning of modern multi-touch-capable user interfaces for automation. The integrated web server enables the use of all HTML5-capable browsers without special plug-ins. The comprehensive portfolio of communication drivers facilitates the connection with all common control systems. Standardised open interfaces guarantee problem-free integration into any IT surroundings.

Your special advantage:

- Easy creation of modern user interfaces without knowledge of web technologies
- Dynamic web interface with adaptive design and customisable control elements
- User and rights management including geographical rights assignment
- Multilingualism thanks to Unicode standard

Future-proof solution
Intuitive user interfaces, configurable elements for gesture control and the use of state-of-the-art web technologies make the solution particularly future-proof.

Efficient project planning
The class-instance concept and automation objects with structure support accelerate project planning. Scripting and customisable control elements increase flexibility for special requirements.

Simple scalability
PROCON-WEB SCADA is easily scalable – from HMI applications on embedded hardware to complex SCADA applications integrated into the IT surroundings.

Ordering data

Type	Number of process variables, max.	Number of devices	Platform for runtime system	Order No.
SCADA runtime licences				
PWEB-SCADA-RT-500/2	500	2	Windows	**2857420000**
PWEB-SCADA-RT-500/5	500	5	Windows	**2857430000**
PWEB-SCADA-RT-500/10	500	10	Windows	**2857470000**
PWEB-SCADA-RT-500/20	500	20	Windows	**2875360000**
PWEB-SCADA-RT-1000/2	1000	2	Windows	**2857480000**
PWEB-SCADA-RT-1000/5	1000	5	Windows	**2857520000**
PWEB-SCADA-RT-1000/10	1000	10	Windows	**2857530000**
PWEB-SCADA-RT-1000/20	1000	20	Windows	**2875350000**
PWEB-SCADA-RT-2000/2	2000	2	Windows	**2857540000**
PWEB-SCADA-RT-2000/5	2000	5	Windows	**2857550000**
PWEB-SCADA-RT-2000/10	2000	10	Windows	**2857560000**
PWEB-SCADA-RT-2000/20	2000	20	Windows	**2875370000**
PWEB-SCADA-RT-5000/2	5000	2	Windows	**2857570000**
PWEB-SCADA-RT-5000/5	5000	5	Windows	**2857580000**
PWEB-SCADA-RT-5000/10	5000	10	Windows	**2857600000**
PWEB-SCADA-RT-5000/20	5000	20	Windows	**2875380000**
PWEB-SCADA-RT-10000/2	10000	2	Windows	**2857610000**
PWEB-SCADA-RT-10000/5	10000	5	Windows	**2857620000**
PWEB-SCADA-RT-10000/10	10000	10	Windows	**2857630000**
PWEB-SCADA-RT-10000/20	10000	20	Windows	**2875390000**
PWEB-SCADA-RT-30000/2	30000	2	Windows	**2862170000**
PWEB-SCADA-RT-30000/5	30000	5	Windows	**2862180000**
PWEB-SCADA-RT-30000/10	30000	10	Windows	**2862190000**
PWEB-SCADA-RT-30000/20	30000	20	Windows	**2875400000**
PWEB-SCADA-RT-60000/2	60000	2	Windows	**2862200000**
PWEB-SCADA-RT-60000/5	60000	5	Windows	**2862210000**
PWEB-SCADA-RT-60000/10	60000	10	Windows	**2862220000**
PWEB-SCADA-RT-60000/20	60000	20	Windows	**2875410000**
PWEB-SCADA-RT-PRO/2	Unlimited	2	Windows	**2862230000**
PWEB-SCADA-RT-PRO/5	Unlimited	5	Windows	**2862240000**
PWEB-SCADA-RT-PRO/10	Unlimited	10	Windows	**2862250000**
PWEB-SCADA-RT-PRO/20	Unlimited	20	Windows	**2875900000**
Embedded Systems runtime license for u-control studio				
PWEB-ES-RT-50/2	50	2	Embedded systems	**2857250000**
PWEB-ES-RT-50/5	50	5	Embedded systems	**2857260000**
PWEB-ES-RT-50/10	50	10	Embedded systems	**2857270000**
PWEB-ES-RT-100/2	100	2	Embedded systems	**2857280000**
PWEB-ES-RT-100/5	100	5	Embedded systems	**2857290000**
PWEB-ES-RT-100/10	100	10	Embedded systems	**2857300000**
PWEB-ES-RT-500/2	500	2	Embedded systems	**2857310000**
PWEB-ES-RT-500/5	500	5	Embedded systems	**2857320000**
PWEB-ES-RT-500/10	500	10	Embedded systems	**2857330000**
PWEB-ES-RT-1000/2	1000	2	Embedded systems	**2857340000**
PWEB-ES-RT-1000/5	1000	5	Embedded systems	**2857350000**
PWEB-ES-RT-1000/10	1000	10	Embedded systems	**2857360000**
PWEB-ES-RT-2000/2	2000	2	Embedded systems	**2857380000**
PWEB-ES-RT-2000/5	2000	5	Embedded systems	**2857390000**
PWEB-ES-RT-2000/10	2000	10	Embedded systems	**2857400000**
PWEB-ES-RT-5000/2	5000	2	Embedded systems	**2875320000**
PWEB-ES-RT-5000/5	5000	5	Embedded systems	**2875330000**
PWEB-ES-RT-5000/10	5000	10	Embedded systems	**2875340000**
Runtime licenses for u-control				
U-CREATE-PROCON-WEB-RT-ES-2000	2000	2	u-control	**2708630000**

u-link Remote Access Service – one tool for all cases

Advanced functions for convenient remote access management

The remote maintenance of machines and system facilitates is often laborious and time-consuming. In addition, there is the demand for a targeted and secured functional connection to the associated IT systems. For many users these two challenges are a major obstacle for the global connection of systems.

u-link guarantees fast and secure access to machines and system facilitates and at the same time enables efficient management of production facilities, user clients, access rights or firmware versions. The intuitive u-link Web portal can be configured quickly and easily without expert knowledge and adapt it to specific processes. Secured servers in Europe provide a online platform that monitors the conformity between different IT systems during remote maintenance.

Individual system management
u-link can manage users and groups as well as their access rights according to individual specifications. These include group allocation and access permission to production facilities.

Low configuration effort
With the intuitive user interface and without specific IT knowledge, you can easily connect routers and clients to each other. With u-link, you can quickly establish a several systems network.

Secure remote access and remote diagnosis
Remote access to machines and systems is provided worldwide everywhere via secure VPN connection. The high availability of the servers grants secure access to your systems at all times.

Status monitoring and status message
Weidmüller Heartbeat can be used to report the availability of a router to u-link. It facilitates status monitoring and enables status messages from the installed router.

u-link.weidmueller.com

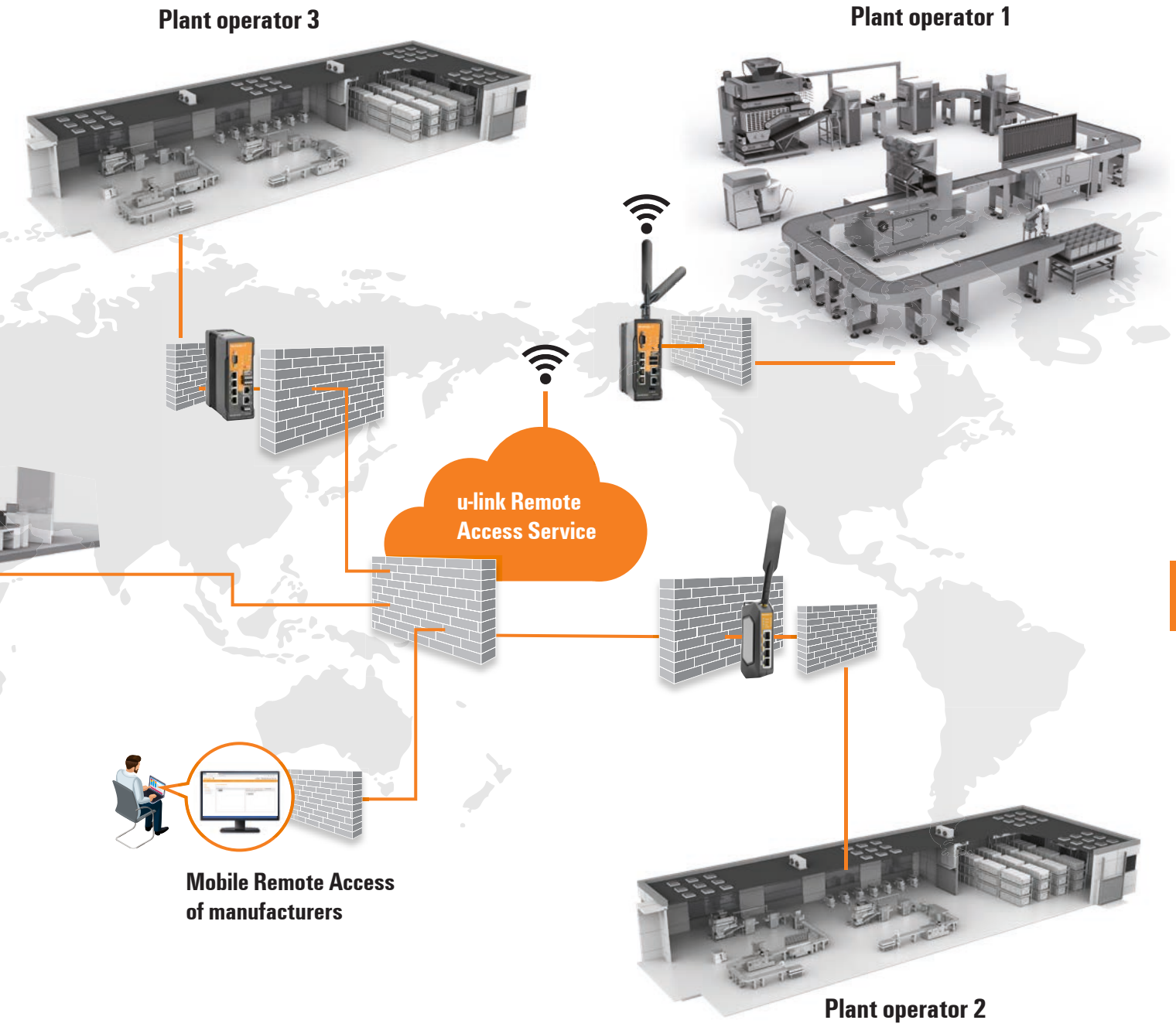
Plant operator 3
Plant operator 1
u-link Remote
Access Service
Mobile Remote Access
of manufacturers
Plant operator 2

Weidmüller Industrial AutoML

The most important facts at a glance

Build and deploy end-to-end machine learning model solutions faster.
You only need your domain knowledge!

With Weidmüller Industrial AutoML, you can easily use advanced analytic functions to optimise operations, improve product quality and enable new business models. As a machine or process expert, you can build and run machine learning models quickly and easily without expert knowledge in data science. As machine builder, the AutoML tool enables you to transform your data and domain knowledge into ML models that add value to your business. In manufacturing environments, the models can be used in order to provide machine operators with real-time analysis and insight during operation, for example. The tool consists of 2 modules: ModelBuilder, which is used to build the models, and ModelRuntime, which is used to run and configure the models.

The benefits for you

Accelerated innovation
Leverage your existing machine data and domain knowledge and benefit directly from advanced analytics. Maintain sovereignty over your own data.

End-to-end solution
Build and continuously improve ML models with AutoML ModelBuilder. Make these ML models run with AutoML ModelRuntime, on-premises or in the cloud.

Build customer relationships and new business models
Increase customer satisfaction with improved products and services. Get a better understanding of your customers' needs.

Benefit from Machine Learning without prior knowledge in data science

Weidmüller Industrial AutoML in a two-minute animation - get a compact overview, a brief explanation of how it works and the key benefits.

Weidmüller Industrial AutoML ModelBuilder

From data to model in just a few steps

Feature of the ModelBuilder
The AutoML service is available as a cloud-based solution. On the basis of prepared data, the user is guided through the following essential building blocks of the tool.

- Import and explore your machine and process data
- Assess your data based on automatically generated quality indicators (e.g. missing values)
- Enrich your data by creating custom features
- Contextualize your data e.g. by defining what's normal behavior and what isn't
- Choose the kind of machine learning model to create e.g. anomaly detection or classification
- The tool then automates the model creation process, including feature engineering, required preprocessing and post processing operations
- Select the most appropriate model of those created, based on criteria such as model performance and plausibility based on model explanation

Weidmüller Industrial AutoML ModelRuntime

For flexible use in the cloud or on-premise

Features of ModelRuntime
AutoML ModelRuntime makes it easy for an organization's machine or process experts to bring ML models directly into the application - with complete flexibility in the cloud or on-premise.

- Deploy your models where you need them: on-premise or in the cloud
- Connect your machine to ModelRuntime by configuring data sources e.g. a database
- Import the created models and assign them to the specific machine. Multiple models can be used for the same machine
- Schedule the model execution according to your requirements
- Visualize results using the embedded GUI
- Use and configure ModelRuntime programmatically by using the provided interfaces
- Put model results into actions by importing model outputs into the existing machine or manufacturing systems

Applications in practice

Applications in practice	Implement your own individual energy management system	K.2
	Intelligent energy management in practice	K.4
	Collect energy and process data with ResMa®	K.6
	Modernise large power grids	K.8
	Reliable monitoring of grid quality	K.10
	Reliable residual current measurement	K.12

Implement your own individual Energy Management system

With our integrated expertise from a single source

Energy Management is a triad of recording all relevant energy consumption data, analysing the information obtained, and comprehensive consulting on possible saving potential. We at Weidmüller see the development of an Energy Management system as a holistic task which combines expert advice with intelligent hardware and software solutions to form a strong unit which is modular in design and therefore tailored to your requirements.

Integrated planning of the approach

Selection of suitable products, solutions and functions

Modular adaptation to your requirements

Hardware components
Extraction of exact measurement data for analysis

Use our comprehensive hardware portfolio of selected „Total Energy Monitoring" components for energy consumption measurement and monitoring, integrated analysis of the quality of electrical supply networks and for efficient, convenient provision of measurement data.

- Energy meters
- Energy analyser
- Energy loggers
- Measurement converter disconnector terminals
- Current transformers
- Power supply solutions
- Connection technology
- u-mation toolbox
- Industrial communication infrastructure
- Customer-specific Plug&Play solutions
- Rogowski coils

Simple, cost-effective integration into existing systems

Broad range of universal-fit connection solutions to connect existing hardware

Use of high-quality, tried and tested standard components

Well proven components that are tailored to each other from the Weidmüller standard range

Option of implementing tailored solutions

Customer-specific assembly and construction of components to meet individual requirements

Software and controlling
Determination of relevant indices for planning

The software modules of the Weidmüller Energy Suite meet your requirements, from the sensor level to the cloud. Parameterise our field devices using ecoExplorer go, digitise the data using the u-create data hub, conduct standardised analyses using the u-create ResMa® or forecast load peaks with the u-create energetics System. The perfect interaction between Weidmüller field devices and the components of the Weidmüller Energy Suite ensures the greatest possible predictability, even for complex requirements.

- Recording process and energy data
- Registering energy and raw materials prices
- Forecasting costly load peaks
- Cost centre analyses
- Long-term data archiving
- Database interfaces for MES/SCADA systems

Compact – IPC-based entry-level solution

Record, automate and bundle measurement data on a central basis. Create transparency about energy media and draw up initial reports.

Server – Extensive scalable

Strong integration into your own infrastructure for extensive data collection. Ideal for cross-site Energy Management.

Intelligent energy management in practice
Insights into Weidmüller's „transparent factory"

Weidmüller has a long tradition of handling energy and resources responsibly. One perfect example for the practical implementation of our collective know-how and the effects which can be achieved is our production hall at the Detmold site. We can use specific examples to show interested customers how well modern Energy Management works in practice.

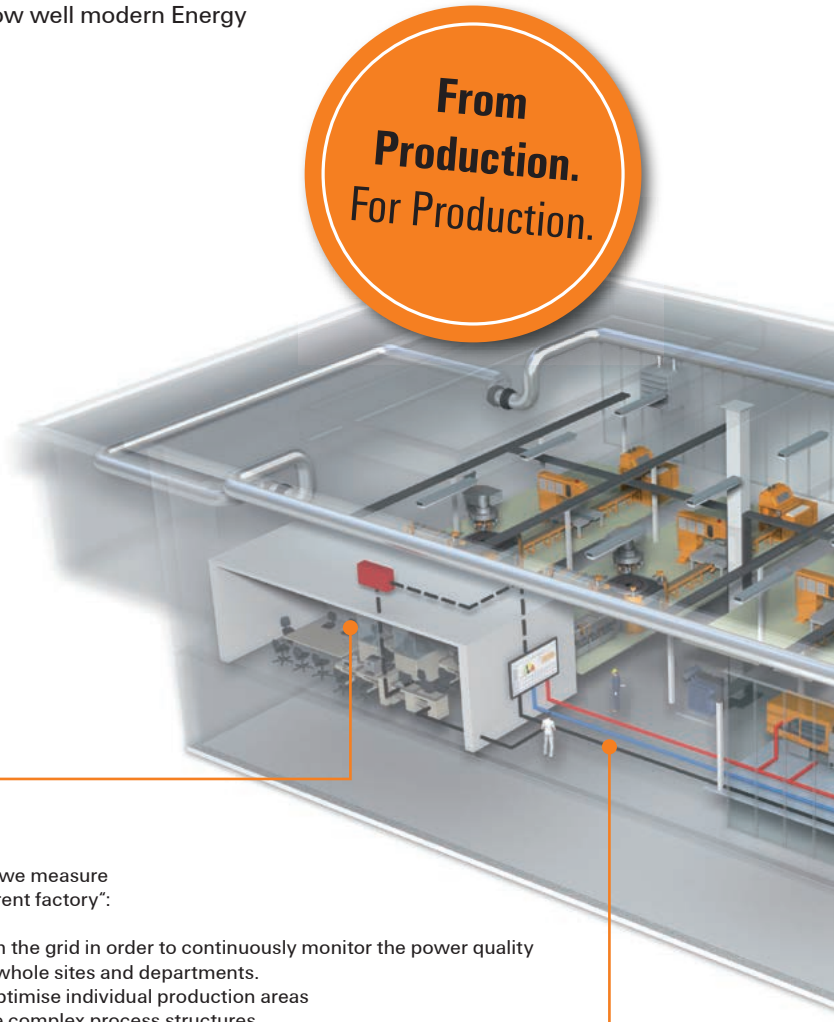

Anchoring Energy Management
All employees are given comprehensive training to increase awareness of conserving energy as a resource. Projects to optimise procurement, increase production efficiency, for new buildings and renovation and handling Energy Management tools are carried out in order to reduce energy consumption even further in future.

Transparency at every level
Depending on the degree of detail required, we measure Energy flows at all five levels in our „transparent factory":

- Measurement at the point of interface with the grid in order to continuously monitor the power quality
- Measurement at factory level to optimise whole sites and departments.
- Measurement at production line level to optimise individual production areas
- Measurement at machine level to optimise complex process structures
- Measurement at machine module level to optimise individual machine and plant elements

Production area	Employees in production	Annual CO_2 saving
6.600 m^2	155 people	approx. 1.665 t CO_2

Needs-based lighting control
Reduction of basic lighting helps reduce the basic load. Where more light is required, lighting positioned as required provides optimum adapted lighting. The use of efficient control and lighting systems minimises the energy required further still.

Systematic minimisation of energy losses
Load-optimised main consumers guarantee optimum energy use with reduced energy peaks Systems in standby mode are switched off. This saves energy and helps reduce the basic and peak loads. Transformers are installed at the performance hotspots near the main consumers and fitted with efficient technology to avoid conversion losses. Distribution routes in the low voltage sector which are as short as possible also minimise conductor losses.

Visit our „transparent factory" with its multi award-winning energy efficiency measures.

Arrange an appointment with your sales engineer

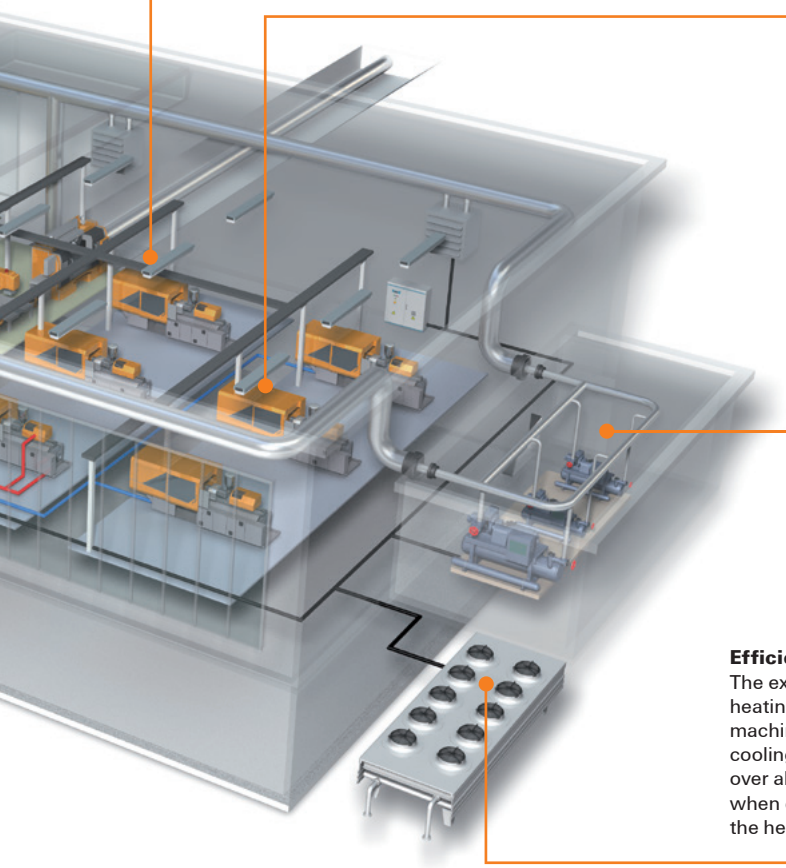

Efficient use of compressed air
Cascaded compressors are intelligently controlled to ensure the network pressure built up is only what is required. Cables are carefully routed, sealed and constantly checked to minimise cable losses. Employees are made aware of the most efficient use of compressed air to reduce the consumption of compressed air further still.

Efficient heating and cooling
The excess heat generated by processes is transferred to the heating system. The heat extraction reduces the burden on the machine cooling system. A free-cooler uses the ambient air for cooling with minimum use of electrical power and even takes over all cooling work in winter. The core processor heat created when generating compressed air is also used and fed back into the heating system.

Energy and process data acquisition - step by step

More than energy management: ResMa® helps to optimize right up to the process level

Good energy management is the result of the interaction between people and technology. Both sides contribute their expertise. This report outlines what to expect from a good system.

It is more important than ever to reduce a company's energy consumption and to increase efficiency with targeted measures. High energy costs and legal regulations require a targeted and structured approach.
According to company information, Weidmüller GTI's ResMa® energy management system helps to record and monitor energy flows and process data as well as evaluate and optimise efficiency. „The generation of meaningful EnPIs (KPIs) including production parameters and their monitoring using energy monitoring is the basis for the reduction of daily monitoring expenses", explains Weidmüller GTI in a press release.

Consumption overview

The consumption overview and the resulting energy balancing means that approaches can quickly be determined with the aim of expanding the measuring equipment or introducing concrete saving potential. These approaches are documented in the PDCA cycle and then reviewed.

Interactively adaptable charts help provide a detailed analysis; they allow for the optimal representation of correlations for every situation and can be saved for further editing, including by other colleagues. Customable reports balance energy and KPIs from production in a clearly arranged layout.

Energy management according to ISO 50001

With the ResMa® energy management system, Weidmüller GTI Software is offering a comprehensive software solution for energy management according to ISO 50001, The energy and resource manager allows manufacturing companies and other organisations to systematically and continually increase energy efficiency. The system supports all tasks for efficient and active energy management, refers to factors that can be influenced by the company and can be adapted to individual requirements. At the same time, the solution also includes the necessary support for the integration into existing automation technology, control technology or

building automation and for the connection of the company's IT systems. Customer-specific requirements regarding energy planning, peak-load optimisation or on-demand control can be tailored to the customer's needs by means of customised support.

User in Kronach

Horst Scholz GmbH in Kronach, Franconia, uses ResMa® for energy management in multiple production and administration buildings; the company specialises in the production of high-precision plastic parts for microtechnology and medical technology. Because some buildings already had energy meters, these were to be integrated into the system. Additional energy meters were connected via Modbus TCP based on the good network infrastructure that was already in place.

Modbus-TCP

The first step involved the company independently adding all of the meters in its first building to the system. Convinced by the simple connection, the company then equipped the newly constructed building with Modbus TCP-capable meters as well. In order to prevent data loss in the event of a network failure, ResMa®-Connect industrial PCs were used, which are set up close to the measurement technology and which cache the data.

„ResMa® allowed us to carry out the step-by-step development of our EnMS on our own and opened up potential for integrating extensive information from production", says Wolfgang Fehn, the management representative for quality and environment at Horst Scholz GmbH.

Process data recording

The third expansion stage has now been implemented, involving the recording of process data from automation technology. For this purpose, Scholz uses three ResMa® connectors and a direct network connection to the most important machines. This makes it possible to use extensive data from the production process directly for KPI development and the performance of analyses within ResMa®.

How can large-scale electricity grids be modernised successfully?
Support from Weidmüller with key component

If, for example, the electricity grids of a six-digit square kilometre area need to be renewed, this amounts to a costly infrastructure project. If the substations also need to be modernised and digitalised as part of a sub-project, the control cabinets need to be renewed in their entirety. Experts from Weidmüller support control cabinet builders who specialise in automation in power distribution.

Any control cabinet manufacturer that needs to find a partner whose components comply with regional and national approval regulations for monitoring power quality will find what they are looking for with Weidmüller. With its key product Energy Analyser D550, a multifunctional measuring device for monitoring voltage quality in accordance with IEC 61000-2-4 and EN 50160, among other things, Weidmüller even satisfies the most demanding requirements. Another advantage is the fact that as a major manufacturer, Weidmüller is geared towards being able to supply large quantities at short notice.

Cooperation from the very beginning

When replacing the control cabinets, it is crucial to ensure universal monitoring of the transformers. This is where the Energy Analyser can really show off its strengths. It measures various parameters of the network quality such as short-term interruptions, transients, starting currents, voltage fluctuations or harmonics caused by contamination. It transfers this data via a Modbus interface for evaluation. This provides the company with transparent information about current incidents and allows it to monitor the networks in real

time while guaranteeing and monitoring operation. When data is recorded and analysed, it is simultaneously entered into the Industrial IoT, giving the company the opportunity to fully exploit the opportunities offered by digitalisation.

Thanks to its decades of experience, Weidmüller can efficiently support and advise control cabinet builders from the very outset of a project. During a qualification phase for a recent project, Weidmüller initially provided samples so that the Analyser could be put through its paces. This convinced the control cabinet builder just as much as Weidmüller's commercial offer, and led them to include Weidmüller in the tender as a listed supplier. Together they were awarded the contract and were able to implement the project successfully. The project volume for Weidmüller ultimately amounted to a total of 1,400 units.

Overview - a real winner for Weidmüller

- Weidmüller has the right product with the necessary approvals and certifications for monitoring network quality
- Weidmüller provides support right from the start of the project, is on hand to assist in an advisory capacity and supervises the project consistently right through to implementation
- As a large manufacturer, Weidmüller is able to guarantee the delivery of the required high quantities.

Outlook

By providing worldwide support for major projects in the field of power engineering and power distribution, this opens up desirable target markets for Weidmüller. Its extensive portfolio for control cabinet building and power distribution provides control cabinet manufacturers with support on site and establishes Weidmüller in the local energy sector.

Reliable monitoring of grid quality

Certified as class A in accordance with IEC 61000-4-30

There is a direct correlation between the quality of the power supply and the lasting security of supply with no noticeable interruptions. Disruptions and damage are often caused by overvoltage and transients. In addition to a reliable supply, high-quality voltage (* point 2. in the figure) is crucial to the reliable operation of equipment with all of its electronic consumers, such as industrial control units or EDP facilities. The grid operator must keep the voltage and frequency as constant as possible, and is liable irrespective of culpability in the event of disruptions (* point 3. in the figure). Precise analysis and documentation using certified procedures are required in order to achieve the greatest possible transparency regarding energy consumption and voltage quality.

Looking for causes

Voltage quality is becoming relevant for an increasing number of providers and consumers – including in the field of renewable energies. More and more photovoltaic and wind power installations have been connected to the medium-voltage grid over the last decade (* point 1. in the figure). The grid operators are responsible for the operation of medium-voltage grids. They therefore have a significant interest in monitoring the quality of electricity at the point of connection with equipment.

Reliable monitoring and error detection

Weidmüller's product portfolio includes the Energy Analyser 750 power quality analyser for comprehensive monitoring. The capabilities it offers allow comprehensive error detection, because in addition to continuously recording consumption it also monitors residual currents. Overvoltage, asymmetries, transients, flicker and other disruption parameters are recorded and analysed. The Energy Analyser 750 complies with all common standards such as EN 50160, IEEE 519 and IEC 61000-2-4, and can be integrated into most communications architectures at low cost thanks to a variety of interfaces.

Generating relevant results

For monitoring it is advisable to use class-A energy analysis devices, which are connected alongside the charging meters. Only analysers that have been certified as class A ensure that the results are reliable, repeatable and comparable. Because regardless of whether you want to hold a "guilty party" to account for damages incurred or identify and remedy sources of disruption as a precaution, this always requires reliable and documented measurements that even stand up in court if necessary.

Detailed insights into equipment

The recording of power quality analysers, which Weidmüller has been selling for years, can also be helpful in this regard. Their extensive analyses and documentation provide a detailed insight into a system. In addition to voltage, frequency and curve shape they also record all forms of disruption. These could be flicker effects or brief voltage drops, which are typical for automated reclosure following electric arc short-circuits. Harmonics from non-linear consumers can also significantly impact the function of other devices. Unlike the basic oscillation in the three-phase system, all of the harmonics that are divisible by three in the neutral conductor reinforce each other instead of cancelling each other out. This can cause the current load on the neutral conductor to rise beyond permissible levels. Harmonics are typically mainly generated by frequency converters as well as surge voltages from switching operations.

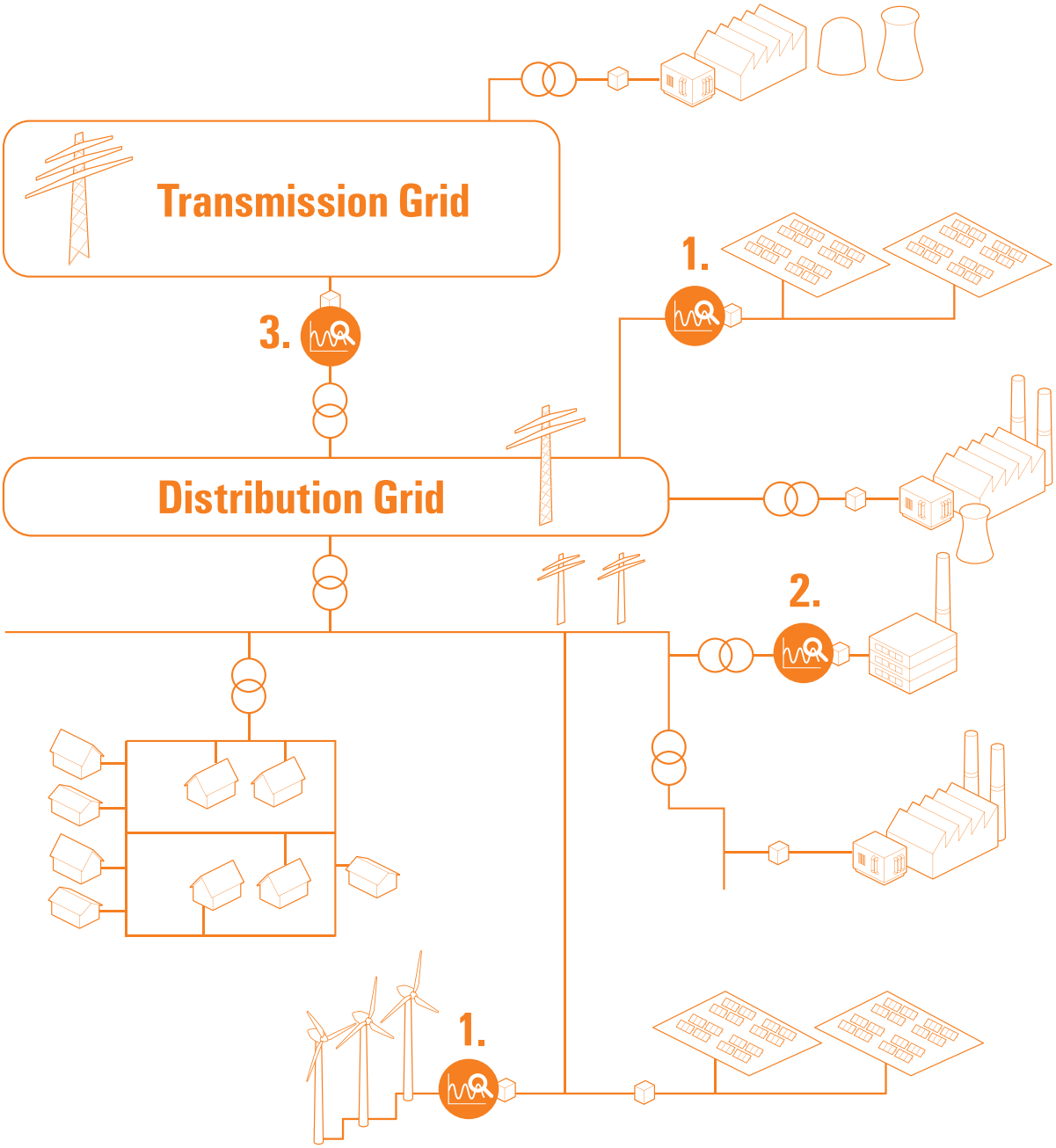

1. Producer
2. Consumer
3. Grid operator

Reliable residual current measurement

Use of RCM (Residual Current Monitoring) measuring instruments

Residual currents caused by the failure of insulation can constitute a significant risk to safety in electrical systems. Using an appropriate protective concept it is possible to detect residual currents, eliminate insulation faults in good time and therefore ensure the availability of the system.

RCM stands for Residual Current Monitoring and means the monitoring of residual currents in electrical systems. This current is calculated as the sum of the currents of all conductors, apart from the protective earth (PE), which feed into the system. Residual currents are typically the result of insulation faults, leakage currents or EMC filter leakage currents for example.

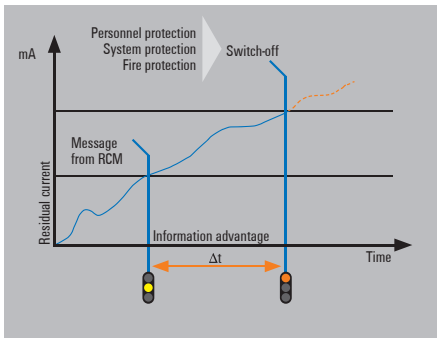

Fig.: Report prior to switching off - an aim of residual current monitoring

Whilst GFI devices (ground failt interrupter) switch off the power supply in the event of a certain residual current being exceeded, RCM measuring devices indicate the actual value, record the long-term development and report the exceeding of a critical value. This message can also be used in order to switch off the power supply via external switching devices (contactors, relays). Through the use of residual current measuring devices it is possible to detect and report residual currents in a timely manner. It is possible to initiate counter measures in good time, so that it is not necessary to switch the system off. This facilitates the implementation of measures in the event of slowly deteriorating insulation values or steadily rising residual currents – caused for example by ageing insulation – before the system is switched off.

Further errors that are detectable by a RCM measurement:
- Insulation faults of lines and electrical operating resources
- Residual currents from electrical loads
- Defective PP power capacitors for the PFC
- Defective components in switched mode power supplies, e.g. in computers
- Correctness of TNS systems (Terra Neutral Separate)
- Disclosure of impermissible PEN connections
- Avoidance of neutral conductor reverse currents to grounded equipment

Residual current monitoring in conjunction with energy measurement in combined energy / RCM measuring devices in electrical systems constitutes a measure for fire protection and maintenance prevention. Down times and the associated costs are thereby reduced. Timely and preventative maintenance – facilitated through the information additionally gained from an RCM measuring device – also significantly enhances the efficiency and availability of a system.

Constant RCM monitoring is of particular significance in preventing unwanted surprises in ongoing operation, and provides consistent information regarding the actual status of the electrical system.

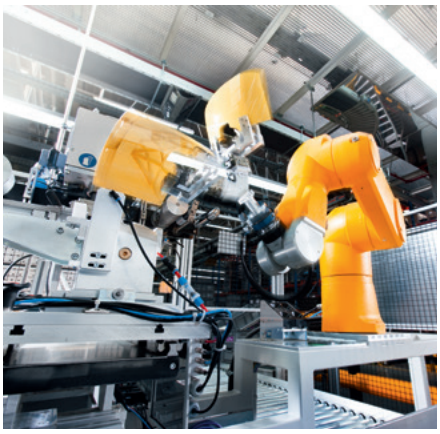

Fundamental measuring process with RCM

The functionality of RCM measuring devices is based on the differential current principle. This requires that all phases be guided through a residual current transformer at the measuring point (outlet to be protected), with the exception of the protective earth. If there is no failure in the system then the sum of all currents will be nil. If, however, residual current is flowing away to ground then the difference will result in the current at the residual current transformer being evaluated by the electronics in the RCM measuring device.

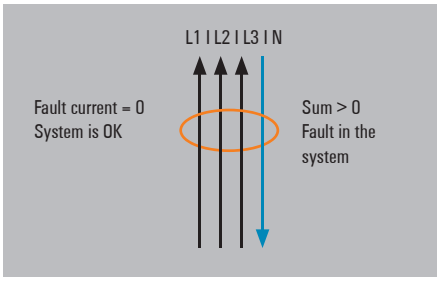

Typical applications

RCM measuring instruments are mainly used in systems where a high level of availability is required, such as:

- Data processing centres, production facilities, hospitals, telecommunications
- TN-S systems with strict EMC requirements
- Equipment at risk of fire
- Equipment in cleanroom conditions
- Research facilities, laboratory technology areas

Weidmüller combines Energy Management, grid quality and residual current monitoring in a single system, providing you with a holistic solution from medium voltage down to the individual circuit.

The following measuring instruments support RCM measurement:

- Energy Meter 700-PN
- Energy Meter 750
- Energy Analyser 550
- Energy Analyser 750

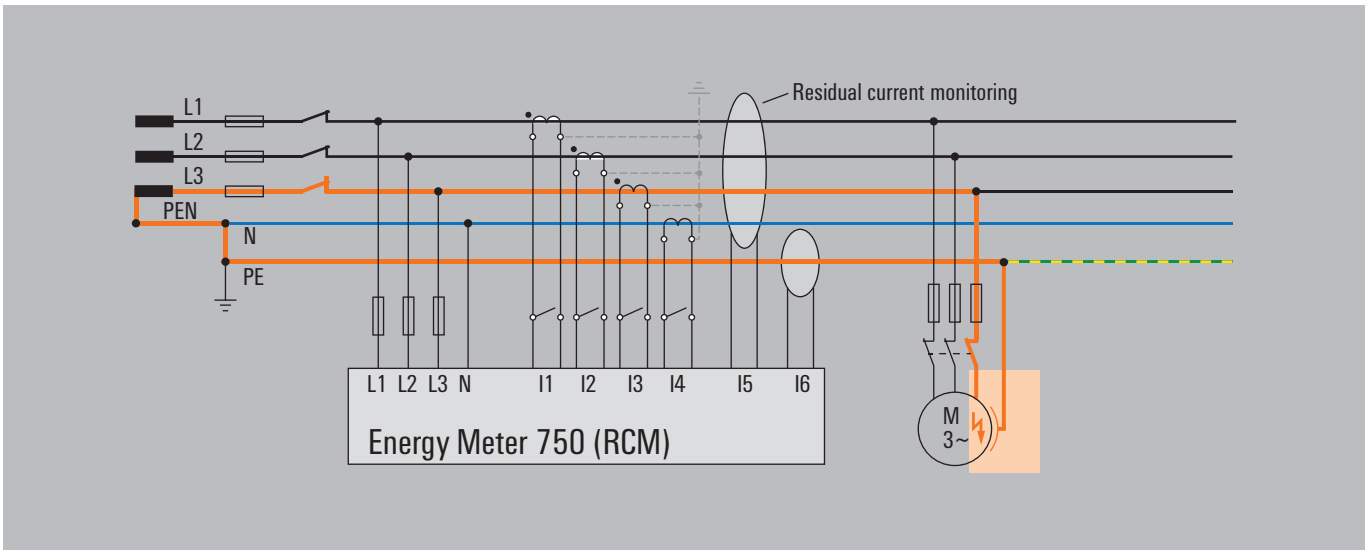

Service and support

Service and support	Service connects – worldwide	V.2
	Engineering services and customised products	V.3
	easyConnect – Your Industrial Service Platform	V.4
	Support Center	V.6
	Additional support services	V.7
	Weidmüller Configurator: intuitive, uncomplicated & fast digital engineering	V.8

Our expertise for your requirements
Service connects – worldwide

Automation technology functions are becoming more complex in a globally-oriented world facing ambitious targets in terms of energy efficiency and smart production. We are your equal partners for the best connections in Industrial Connectivity.

Our personal support answers all questions reliably and expertly. During planning, installation or operation our service and support offer is your best companion.

In short: Weidmüller´s global service combines our expertise with your requirements.

Your way to our service
www.weidmueller.com/service

Engineering services and customised products

Automation engineering and connectivity consulting belongs to our services as well as assembly of engineered products. We also support the process from the idea to the product with our Weidmüller Configurator and the Configure-to-Order process.

Consulting and engineering
The challenge for you is reducing costs and increasing efficiency. This requires intelligent, individual solutions. Whether it is modified products, pre-fitted mounting rails or complete small cabinets – our application centres provide a highly qualified custom-made engineering and production service.

Connectivity Consulting
Increase your competitiveness - supported by our experts
Our drive is to optimise your competitiveness. That's why our team of experts supports you in significantly increasing your efficiency in electrical machine design and control cabinet construction. With proven products and services from the Weidmüller portfolio – and with the experience gained from over 300 projects worldwide.

Assembled terminal rails - Flexibly designed to suit your requirements
Your processes in panel building have to be fast, flexible and productive. This is the only way you can cut your costs and increase efficiency. Depending on the application in question, you will have different requirements with respect to the engineering service, delivery speed and flexibility to be provided.

Modified and assembled enclosures - Competitive advantages included
To compete internationally, your plants need to satisfy high standards of safety, quality and performance. The smart combination of consultation, application expertise and industry know-how is our key to finding a custom-fit solution for your application. Reduce costs and increase efficiency.

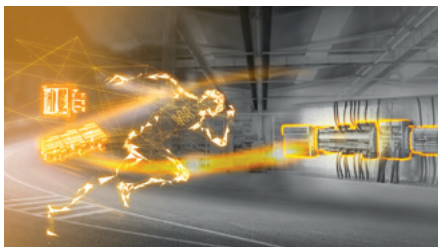

Fast Delivery Service - Your ideas deserve a quick realisation
Obtain offers 24/7 and within minutes, including directly orderable article numbers with our Fast Delivery Service. The Weidmüller Configurator (WMC) for planning and configuration is key for consistent processes. Dispatch your orders in 5 days. Assemble individual terminal strips and enclosures from batch size 1!

Your ticket to the world of digital service
easyConnect – Your Industrial Service Platform

Our cloud-based platform is your ticket to the world of digital services from Weidmüller, and the intuitive and future-proof tool for your way to the Industrial IoT. Realise your use cases easily, consistently and without any relevant prior knowledge, thanks to the perfect interaction of platform, devices and diverse software services.

As an open, modular and perfectly integrable system, the platform is your enabler for a wide range of use cases. Increase your efficiency and unleash your full innovation potential with easyConnect.

Interested in using easyConnect?
Learn how to get started with easyConnect step-by-step.

www.weidmueller.com/easyconnect

Why should you use easyConnect?

- You want to enter your digital transformation step-by-step?
- You want to make the step into Industrial IOT, but have no or little IT expertise?
- You want to use your digital data for smart & scalable services?
- You want to offer digital services (such as customised dashboard) to your customers?
- You want to improve your service offering and efficiency, e.g. through remote access?
- You feel Weidmüller's digital services are interesting, but you have „your cloud" already?

Weidmüller comes up with the solution: easyConnect, the new digitalisation platform. It bundles Weidmüller's digital services at one place in the cloud and connects them with various Weidmüller devices.

With easyConnect you start digitalising your application step-by-step without ballast in a secure way.

The following services are initially available on easyConnect:

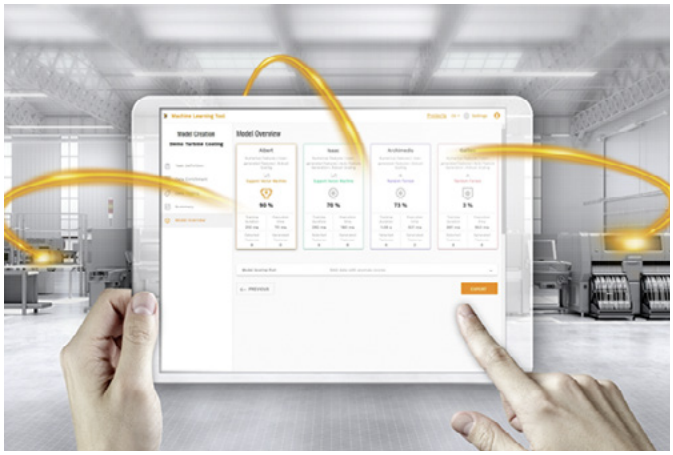

Device management
Adding and managing cloud-connected devices is typically the first step in any Industrial IoT use case.

Asset management
The asset management service is a modelling tool that allows users to model their assets and processes and link them to relevant time series data.

Remote access (u-link)
u-link guarantees a quick and secure access to machines and plants while also allowing for efficient management.

Data visualisation
easyConnect data visualisation services enable users to view, monitor and display live and historical data.

AutoML
With Weidmüller Industrial AutoML, you can optimize operations, increase product quality and develop new business models by benefiting from advanced analytics.

Expand the possibilities of our products

Our Support Center provides you with comprehensive, clear and personal assistance

Receive fast and intuitive support to get the most out of our products in your application. In our new Support Center you can search or navigate to the many application notes, product information, video tutorials or software downloads of our products.

- **Everything at a glance –** One central support hub, where all relevant information is available
- **Powerful search –** Provides filter functions for various types of information and products
- **Different views and navigations –** Content provided in views product information, engineering support or software downloads
- **More than 170,000 downloads –** Application notes, video tutorials, templates and examples, user documentation, engineering data, ...
- **Personal contact –** Direct access to your personal technical contact in your country

Explore the world of our new Support Center
support.weidmueller.com

Additional support services

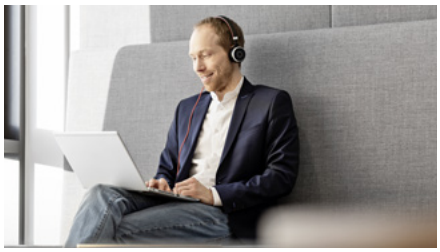

Training and Webinars
Stay tuned in a world that is accelerating. In our entertaining interactive webinars, we offer you the opportunity to learn about new products and technology topics and to interact with our experts.

Repairs and replacement parts
We offer repair and components for our Workplace Solutions as well as assistance for other Weidmüller products. Find out how our experts can help you with your repair request.

Security advisory board
Our Product Security Incident Response Team (PSIRT) continuously informs you about possible security-related vulnerabilities of our products.

Engineering data
For the quick integration of our products into your design, there are a lot of digital product data for engineering systems like EPLAN, Zuken E3.series, WSCAD and many others available for download.

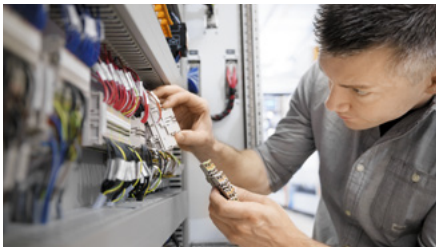

Product change notifications
Technical modifications of our products always available online.

Technical product catalogues
Technical data for our entire program in Industrial Connectivity for download in PDF-format.

From the idea to the finished solution

Weidmüller Configurator: intuitive, uncomplicated & fast digital engineering

Digital engineering can be so easy – with the Weidmüller Configurator!

It´s a **free to use** software application to easily configure industrial solutions. It features more than **12,000 articles** from multiple product families including rail-mounted components, industrial and ex-certified enclosures, Heavy Duty Connectors, remote I/O-systems and PCB connectors.

Unleash the full power of digital engineering:

Our application wizards help you choose the right articles.
Place, mark or modify them to your needs and get your solution **visualized in 3D** – what you see is what you get!

Our promise: Speed up your solution planning process by up to 70%!

Your benefits:

- **Proven configuration designs in real 3D:** The plausibility and collision check with the complete digital documentation ensures that you can rely 100% on your configuration.
- **Seamless E-CAD Roundtrip:** Interfaces enable the simple exchange of product data between the WMC and all common engineering tools, such as Zuken E3 or EPLAN Electric P8.
- **Sample Service & Fast Delivery Service:** to support your design-in process, we offer a **3-day sample service** for many products. Inquire them directly online – for free!
  You want your solution right away? Our **Fast Delivery Service** guarantees delivery of individually assembled terminal strips or enclosures within a few days.

Get started online now!

The Weidmüller Configurator makes solution planning easy. Visit our website for more information, tutorials and download it for free:

www.weidmueller.com/wmc

or register on **easyconnect.weidmueller.com**
and use it online.

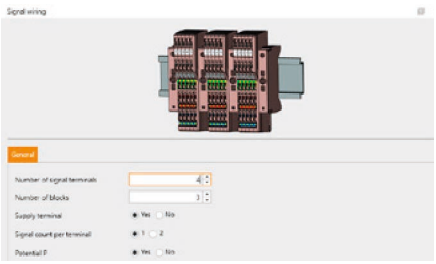

Wizards:
Design complete applications within few clicks – even without detailed product knowledge – for signal wiring, load monitoring, instrument transformers, enclosures, remote I/O-systems and many more.

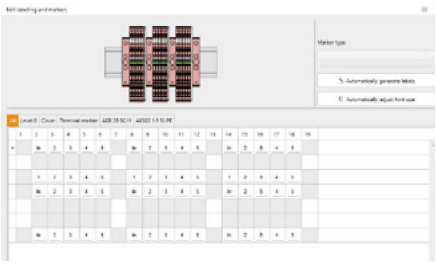

Assistants:
Finalize your solutions with supporting assistants to add cross-connectors, markers or colors and verify the faultlessness. Automatic modes save valuable time!

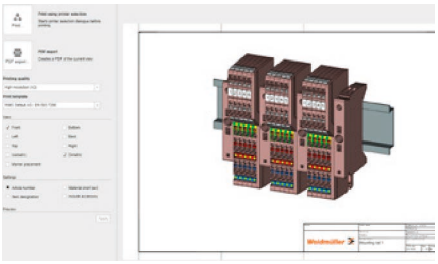

1-click documentation:
Get assembly drawings for production – only 1 click. Bill of material – only 1 click. The complete solution documentation including all component data sheets – you´re right, only 1 click!

Index

Index	Index Type	X.2
	Index Order No.	X.4
	Addresses worldwide	X.6

Type	Order No.	Page
B		
BATTERY-CR1220-3V	2684410000	H.14
BATTERY-CR1220-3V	2684410000	H.15
BATTERY-CR1220-3V	2684410000	H.16
C		
CMA-101-2500-5A-10VA-0,5	2680250000	E.12
CMA-101-2500-5A-10VA-1	2680190000	E.12
CMA-31-100-5A-2,5VA-1	1482030000	E.12
CMA-31-125-5A-2,5VA-0,5	2680200000	E.12
CMA-31-150-5A-2,5VA-0,5	2421030000	E.12
CMA-31-150-5A-5VA-1	2420960000	E.12
CMA-31-200-5A-2,5VA-0,5	2421020000	E.12
CMA-31-200-5A-5VA-1	2420950000	E.12
CMA-31-250-5A-5VA-0,5	1482050000	E.12
CMA-31-250-5A-5VA-1	2420940000	E.12
CMA-31-300-5A-5VA-0,5	2420990000	E.12
CMA-31-400-5A-5VA-0,5	2420980000	E.12
CMA-31-400-5A-5VA-1	2420920000	E.12
CMA-31-500-5A-5VA-0,5	1482070000	E.12
CMA-31-500-5A-5VA-1	2420910000	E.12
CMA-31-600-5A-5VA-0,5	2420970000	E.12
CMA-31-600-5A-5VA-1	2420900000	E.12
CMA-31-60-5A-1,25VA-1	2421380000	E.12
CMA-31-750-5A-5VA-0,5	1482080000	E.12
CMA-31-750-5A-5VA-1	2420890000	E.12
CMA-31-75-5A-2,5VA-1	1482040000	E.12
CMA-41-1000-5A-5VA-0,5	2680210000	E.12
CMA-41-1000-5A-5VA-1	2680150000	E.12
CMA-51-1250-5A-5VA-0,5	2680220000	E.12
CMA-51-1250-5A-5VA-1	2680160000	E.12
CMA-61-1500-5A-5VA-0,5	2680230000	E.12
CMA-61-1500-5A-5VA-1	2680170000	E.12
CMA-81-2000-5A-10VA-0,5	2680240000	E.12
CMA-81-2000-5A-10VA-1	2680180000	E.12
CMA-CTM-7-32-1A-0.2VA-1	2525150000	E.11
CMA-CTM-7-50-1A-0.4VA-1	2556030000	E.11
CMA-CTM-7-64-1A-0.5VA-1	2556010000	E.11
CMA-RCM-DACT-120	2603450000	E.14
CMA-RCM-DACT-20	2603420000	E.14
CMA-RCM-DACT-35	2603430000	E.14
CMA-RCM-DACT-60	2603440000	E.14
D		
DEK 5/8-11.5 MC NE WS	1341630000	H.14
DEK 5/8-11.5 MC NE WS	1341630000	H.15
DEK 5/8-11.5 MC NE WS	1341630000	H.16
DEK 5/8-11.5 MC NE WS	1341630000	H.7
DEK 5/8-11.5 MC NE WS	1341630000	H.9
DEK 5/8-11.5 MC SDR	1341610000	H.14
DEK 5/8-11.5 MC SDR	1341610000	H.15
DEK 5/8-11.5 MC SDR	1341610000	H.16
DEK 5/8-11.5 MC SDR	1341610000	H.7
DEK 5/8-11.5 MC SDR	1341610000	H.9
E		
EM CONNECTOR CURRENT ATTB	8000100996	E.21
EM CONNECTOR VOLTAGE ATTB	8000100997	E.21
EM110-RTU-2P	7760051002	B.4
EM110-RTU-2P	7760051002	B.6
EM111-RTU-2P	7760051001	B.4
EM111-RTU-2P	7760051001	B.6
EM120-RTU-2P	7760051004	B.4
EM120-RTU-2P	7760051004	B.7
EM122-RTU-2P	7760051003	B.4
EM122-RTU-2P	7760051003	B.7
EM220-RTU-4DI2DO	7760051005	B.4
EM220-RTU-4DI2DO	7760051005	B.8
EM220-RTU-4DI2DO-GW	7760051006	B.4
EM220-RTU-4DI2DO-GW	7760051006	B.8
EM-CONNECTIVITY-BOX 144	8000028952	F.10
EM-CONNECTIVITY-BOX 96	8000028950	F.10
EM-CONNECTIVITY-BOX TS	8000028951	F.10
ENERGY ANALYSER 550	2425500000	C.4
ENERGY ANALYSER 550	2425500000	C.6
ENERGY ANALYSER 550-24	2602580000	C.4
ENERGY ANALYSER 550-24	2602580000	C.6
ENERGY ANALYSER 750-230	2534130000	C.4
ENERGY ANALYSER 750-230	2534130000	C.7
ENERGY ANALYSER 750-24	2534160000	C.4
ENERGY ANALYSER 750-24	2534160000	C.7
ENERGY ANALYSER D550	2425510000	C.4
ENERGY ANALYSER D550	2425510000	C.5
ENERGY ANALYSER D550-24	2489780000	C.4
ENERGY ANALYSER D550-24	2489780000	C.5
ENERGY LOGGER D550	2425520000	D.3
ENERGY LOGGER S0 MODULE	2446170000	D.3
ENERGY METER 520-230	2500880000	B.13
ENERGY METER 520-230	2500880000	B.15
ENERGY METER 520-24	2500860000	B.13
ENERGY METER 520-24	2500860000	B.15
ENERGY METER 525-230	2540890000	B.13
ENERGY METER 525-230	2540890000	B.16
ENERGY METER 525-24	2540880000	B.13
ENERGY METER 525-24	2540880000	B.16
ENERGY METER 610-230	2540850000	B.13
ENERGY METER 610-230	2540850000	B.17
ENERGY METER 610-24	2540920000	B.13
ENERGY METER 610-24	2540920000	B.17
ENERGY METER 610-PB-230	2540870000	B.13
ENERGY METER 610-PB-230	2540870000	B.18
ENERGY METER 610-PB-24	2540860000	B.13
ENERGY METER 610-PB-24	2540860000	B.18
ENERGY METER 700-PN-230	2500890000	B.13
ENERGY METER 700-PN-230	2500890000	B.19
ENERGY METER 700-PN-24	2500870000	B.13
ENERGY METER 700-PN-24	2500870000	B.19
ENERGY METER 750-230	2540910000	B.13
ENERGY METER 750-230	2540910000	B.20
ENERGY METER 750-24	2540900000	B.13
ENERGY METER 750-24	2540900000	B.20
ENERGY METER BRACKET B1	2433040000	C.6
ENERGY METER BRACKET B1	2433040000	C.7
ENERGY METER BRACKET L1	2433060000	B.16
ENERGY METER BRACKET L1	2433060000	B.17
ENERGY METER BRACKET L1	2433060000	B.18
ENERGY METER BRACKET L1	2433060000	B.19
ENERGY METER BRACKET L1	2433060000	B.20
ENERGY METER BRACKET S2	2433070000	B.15
ENERGY METER D370-CBM	2540830000	B.13
ENERGY METER D370-CBM	2540830000	B.14
ENERGY METER D650	2425490000	B.13
ENERGY METER FIXING SET	2433030000	B.15
ENERGY METER FIXING SET	2433030000	B.16
ENERGY METER FIXING SET	2433030000	B.17
ENERGY METER FIXING SET	2433030000	B.18
ENERGY METER FIXING SET	2433030000	B.19
ENERGY METER FIXING SET	2433030000	B.20
ENERGY METER SEAL L144	2495630000	C.6
ENERGY METER SEAL L144	2495630000	C.7
ENERGY METER SEAL L96-2	2495610000	B.15
ENERGY METER SEAL L96-2	2495610000	B.16
ENERGY METER SEAL L96-2	2495610000	B.17
ENERGY METER SEAL L96-2	2495610000	B.18
ENERGY METER SEAL L96-2	2495610000	B.19
ENERGY METER SEAL L96-2	2495610000	B.20
ESO UR20 DIN A4 WS	1429430000	H.14
ESO UR20 DIN A4 WS	1429430000	H.15
ESO UR20 DIN A4 WS	1429430000	H.16
ESO UR20 DIN A4 WS	1429430000	H.7
ESO UR20 DIN A4 WS	1429430000	H.9
F		
FP IOT MD01 4EU S2 00000	8000058270	G.6
FP IOT MD01 LAN S2 00000	8000058603	G.6
I		
IE-UD50KW-MODBUS-W	2739330000	G.10
IE-USB-A-MICRO-1.8M	1487980000	H.14
IE-USB-A-MICRO-1.8M	1487980000	H.15
IE-USB-A-MICRO-1.8M	1487980000	H.16
IE-USB-A-MICRO-1.8M	1487980000	H.7
IOT-GW30	2682620000	G.7
IOT-GW30	2682620000	H.24
IOT-GW30-4G-EU	2682630000	G.7
IOT-GW30-4G-EU	2682630000	H.24
K		
KCMA 5-1000-5A-5VA-0.5	2753400000	E.9
KCMA 5-250-5A-1.5VA-1	2753360000	E.9
KCMA 5-400-5A-1VA-0.5	2753370000	E.9
KCMA 5-500-5A-2.5VA-0.5	2753380000	E.9
KCMA 5-600-5A-2.5VA-0.5	2753390000	E.9
KCMA-18-100-1A-0.3VA-1	2752990000	E.4
KCMA-18-100-1A-1,25VA-3	1482010000	E.4
KCMA-18-125-1A-0.5VA-1	2753000000	E.4
KCMA-18-125-1A-1,5VA-3	2752980000	E.4
KCMA-18-150-1A-1VA-1	2753010000	E.4
KCMA-18-150-1A-2VA-3	2420770000	E.4
KCMA-18-150-5A-1VA-1	2753030000	E.4
KCMA-18-200-1A-1.5VA-1	2753020000	E.4
KCMA-18-200-1A-3VA-3	2420760000	E.4
KCMA-18-200-5A-1,5VA-1	2753040000	E.4
KCMA-18-250-1A-1,5VA-1	1482000000	E.4
KCMA-18-250-1A-4VA-3	2420750000	E.4
KCMA-18-250-5A-1VA-0.5	2753050000	E.4
KCMA-18-50-1A-1VA-3	1482020000	E.4
KCMA-18-75-1A-1VA-3	2420780000	E.4
KCMA-28-200-1A-0.3VA-1	2753060000	E.5
KCMA-28-250-1A-1VA-1	2753070000	E.5
KCMA-28-250-5A-1VA-1	2753110000	E.5
KCMA-28-300-1A-1.5VA-1	2753080000	E.5
KCMA-28-300-5A-1.5VA-1	2753120000	E.5
KCMA-28-400-1A-2.5VA-1	2753090000	E.5
KCMA-28-400-5A-2.5VA-1	2753130000	E.5
KCMA-28-500-1A-1VA-0.5	2753100000	E.5
KCMA-28-500-5A-3VA-1	2753140000	E.5
KCMA-32-400-1A-5VA-1	1481990000	E.6
KCMA-32-400-5A-5VA-1	2420730000	E.6
KCMA-32-500-5A-5VA-1	2420740000	E.6
KCMA-32-600-1A-5VA-1	1481980000	E.6
KCMA-32-600-5A-5VA-1	2420720000	E.6
KCMA-42-1000-1A-2.5VA-0.5	2753220000	E.7
KCMA-42-1000-5A-2.5VA-0.5	2753290000	E.7
KCMA-42-250-1A-2.5VA-1	2753150000	E.7
KCMA-42-300-1A-2.5VA-1	2753160000	E.7
KCMA-42-300-5A-2.5VA-1	2753230000	E.7
KCMA-42-400-1A-2.5VA-0.5	2753170000	E.7
KCMA-42-400-5A-5VA-1	2753240000	E.7
KCMA-42-500-1A-2.5VA-0.5	2753180000	E.7
KCMA-42-500-5A-5VA-1	2753250000	E.7
KCMA-42-600-1A-2.5VA-0.5	2753190000	E.7
KCMA-42-600-5A-2.5VA-0.5	2753260000	E.7
KCMA-42-750-1A-2.5VA-0.5	2753200000	E.7
KCMA-42-750-5A-2.5VA-0.5	2753270000	E.7
KCMA-42-800-1A-2.5VA-0.5	2753210000	E.7
KCMA-42-800-5A-2.5VA-0.5	2753280000	E.7
KCMA-44-1000-5A-5VA-1	2437400000	E.8
KCMA-44-750-5A-5VA-1	2420710000	E.8
KCMA-44-800-5A-5VA-1	2437370000	E.8
KCMA-8-1000-5A-10VA1	2728130000	E.10
KCMA-8-1000-5A-5VA-0.5	2753430000	E.10
KCMA-8-1200-5A-10VA1	2728140000	E.10
KCMA-8-1200-5A-5VA-0.5	2753450000	E.10
KCMA-8-1500-5A-15VA1	2728150000	E.10
KCMA-8-2000-5A-15VA1	2728160000	E.10
KCMA-8-2500-5A-15VA1	2728170000	E.10
KCMA-8-250-5A-1.5VA1	2728090000	E.10
KCMA-8-3000-5A-15VA1	2728180000	E.10
KCMA-8-4000-5A-15VA1	2728190000	E.10
KCMA-8-5000-5A-15VA1	2728210000	E.10
KCMA-8-500-5A-5VA1	2728100000	E.10
KCMA-8-600-5A-2.5VA-0.5	2753410000	E.10
KCMA-8-750-5A-2VA1	2728110000	E.10
KCMA-8-800-5A-2.5VA-0.5	2753420000	E.10
KCMA-RCM-23D	2656270000	E.16
KCMA-RCM-58D	2656280000	E.16
KCMA-RCM-812D	2656290000	E.16
P		
PM 2.7/2.6 MC NE WS	1323710000	H.14
PM 2.7/2.6 MC NE WS	1323710000	H.15
PM 2.7/2.6 MC NE WS	1323710000	H.16
PM 2.7/2.6 MC NE WS	1323710000	H.7
PM 2.7/2.6 MC NE WS	1323710000	H.9
PM 2.7/2.6 MC SDR	1323700000	H.14
PM 2.7/2.6 MC SDR	1323700000	H.15
PM 2.7/2.6 MC SDR	1323700000	H.16
PM 2.7/2.6 MC SDR	1323700000	H.7
PM 2.7/2.6 MC SDR	1323700000	H.9
PNP-16-MOD-TCP	2716650000	F.6
PNP-32-MOD-TCP	2716660000	F.6
PNP-63-MOD-TCP	2716670000	F.7
PNP-U-MOD-TCP	2716690000	F.7
PWEB-DESIGNER-PRO	2857650000	J.3
PWEB-ES-RT-100/10	2857300000	J.6
PWEB-ES-RT-100/2	2857280000	J.6
PWEB-ES-RT-100/5	2857290000	J.6
PWEB-ES-RT-1000/10	2857360000	J.6
PWEB-ES-RT-1000/2	2857340000	J.6
PWEB-ES-RT-1000/5	2857350000	J.6
PWEB-ES-RT-2000/10	2857400000	J.6
PWEB-ES-RT-2000/2	2857380000	J.6
PWEB-ES-RT-2000/5	2857390000	J.6
PWEB-ES-RT-50/10	2857270000	J.6
PWEB-ES-RT-50/2	2857250000	J.6
PWEB-ES-RT-50/5	2857260000	J.6
PWEB-ES-RT-500/10	2857330000	J.6
PWEB-ES-RT-500/2	2857310000	J.6
PWEB-ES-RT-500/5	2857320000	J.6
PWEB-ES-RT-5000/10	2875340000	J.6
PWEB-ES-RT-5000/2	2875320000	J.6
PWEB-ES-RT-5000/5	2875330000	J.6
PWEB-SCADA-RT-1000/10	2857530000	J.6
PWEB-SCADA-RT-1000/2	2857480000	J.6
PWEB-SCADA-RT-1000/20	2875350000	J.6
PWEB-SCADA-RT-1000/5	2857520000	J.6
PWEB-SCADA-RT-10000/10	2857630000	J.6
PWEB-SCADA-RT-10000/2	2857610000	J.6
PWEB-SCADA-RT-10000/20	2875390000	J.6
PWEB-SCADA-RT-10000/5	2857620000	J.6
PWEB-SCADA-RT-2000/10	2857560000	J.6
PWEB-SCADA-RT-2000/2	2857540000	J.6
PWEB-SCADA-RT-2000/20	2875370000	J.6
PWEB-SCADA-RT-2000/5	2857550000	J.6
PWEB-SCADA-RT-30000/10	2862190000	J.6
PWEB-SCADA-RT-30000/2	2862170000	J.6
PWEB-SCADA-RT-30000/20	2875400000	J.6
PWEB-SCADA-RT-30000/5	2862180000	J.6
PWEB-SCADA-RT-500/10	2857470000	J.6
PWEB-SCADA-RT-500/2	2857420000	J.6
PWEB-SCADA-RT-500/20	2875360000	J.6
PWEB-SCADA-RT-500/5	2857430000	J.6
PWEB-SCADA-RT-5000/10	2857600000	J.6
PWEB-SCADA-RT-5000/2	2857570000	J.6
PWEB-SCADA-RT-5000/20	2875380000	J.6
PWEB-SCADA-RT-5000/5	2857580000	J.6
PWEB-SCADA-RT-60000/10	2862220000	J.6
PWEB-SCADA-RT-60000/2	2862200000	J.6
PWEB-SCADA-RT-60000/20	2875410000	J.6
PWEB-SCADA-RT-60000/5	2862210000	J.6
PWEB-SCADA-RT-PRO/10	2862250000	J.6
PWEB-SCADA-RT-PRO/2	2862230000	J.6
PWEB-SCADA-RT-PRO/20	2875900000	J.6
PWEB-SCADA-RT-PRO/5	2862240000	J.6
R		
RCMA-B22-D125-1.5	2593380000	E.20
RCMA-B22-D125-4.5	2593350000	E.20
RCMA-B22-D125-6.0	2831100000	E.20
RCMA-B22-D175-1.5	2593390000	E.20
RCMA-B22-D175-4.5	2593360000	E.20
RCMA-B22-D175-6.0	2831110000	E.20
RCMA-B22-D300-6.0	2865880000	E.20
RCMA-B22-D70-1.5	2593370000	E.20
RCMA-B22-D70-4.5	2593340000	E.20
RCMA-B22-D70-6.0	2831090000	E.20
RCMC-5000-1A-P	2593400000	E.20
RCMC-5000-AO-P	2593410000	E.20
S		
SD-CARD-8GB	2684400000	H.14
SD-CARD-8GB	2684400000	H.15
SD-CARD-8GB	2684400000	H.16
T		
THM UR20 GE	1429910000	H.14
THM UR20 GE	1429910000	H.15
THM UR20 GE	1429910000	H.16
THM UR20 GE	1429910000	H.7
THM UR20 GE	1429910000	H.9
THM UR20 WS	1429420000	H.14
THM UR20 WS	1429420000	H.15
THM UR20 WS	1429420000	H.16
THM UR20 WS	1429420000	H.7
THM UR20 WS	1429420000	H.9
U		
UC20-SL2000-EC	2674520000	H.14
UC20-SL2000-EC-CAN	2674620000	H.15
UC20-SL2000-0LAC-EC	2638920000	H.14
UC20-SL2000-0LAC-EC-CAN	2655590000	H.15
UC20-WL2000-AC	1334950000	H.16
U-CREATE-PROCON-WEB-RT-ES-2000	2708630000	J.6
U-CREATE-STUDIO	2660130000	H.14
U-CREATE-STUDIO	2660130000	H.15
U-CREATE-STUDIO-ANNUAL	2722630000	H.14
U-CREATE-STUDIO-ANNUAL	2722630000	H.15
UR20-EBK-ACC	1346610000	H.7
UR20-EBK-ACC	1346610000	H.9
UR20-FBC-MOD-TCP-ECO	2659700000	H.9
UR20-FBC-MOD-TCP-V2	2476450000	H.7
UR20-PK-1334950000-SP	2605360000	H.16
UR20-PK-2476450000-SP	2485280000	H.7
UR20-PK-2659700000-SP	2702610000	H.9
UR20-PK-2674520000-SP	2665170000	H.14
UR20-PK-2674620000-SP	2570120000	H.15
UR20-SM-ACC	1339920000	H.14
UR20-SM-ACC	1339920000	H.15
UR20-SM-ACC	1339920000	H.16
UR20-SM-ACC	1339920000	H.7
UR20-SM-ACC	1339920000	H.9
US67-BAT-COSL	2757620000	G.5
US67-PLATE64-STD	2811910000	G.5
US67-USB-STICK-BLE	2874720000	G.6
US67-V1T-BLE	2751260000	G.4

Order No.	Type	Page

1320000000

1323700000	PM 2.7/2.6 MC SDR	H.14
1323700000	PM 2.7/2.6 MC SDR	H.15
1323700000	PM 2.7/2.6 MC SDR	H.16
1323700000	PM 2.7/2.6 MC SDR	H.7
1323700000	PM 2.7/2.6 MC SDR	H.9
1323710000	PM 2.7/2.6 MC NE WS	H.14
1323710000	PM 2.7/2.6 MC NE WS	H.15
1323710000	PM 2.7/2.6 MC NE WS	H.16
1323710000	PM 2.7/2.6 MC NE WS	H.7
1323710000	PM 2.7/2.6 MC NE WS	H.9

1330000000

1334950000	UC20-WL2000-AC	H.16
1339920000	UR20-SM-ACC	H.14
1339920000	UR20-SM-ACC	H.15
1339920000	UR20-SM-ACC	H.16
1339920000	UR20-SM-ACC	H.7
1339920000	UR20-SM-ACC	H.9

1340000000

1341610000	DEK 5/8-11.5 MC SDR	H.14
1341610000	DEK 5/8-11.5 MC SDR	H.15
1341610000	DEK 5/8-11.5 MC SDR	H.16
1341610000	DEK 5/8-11.5 MC SDR	H.7
1341610000	DEK 5/8-11.5 MC SDR	H.9
1341630000	DEK 5/8-11.5 MC NE WS	H.14
1341630000	DEK 5/8-11.5 MC NE WS	H.15
1341630000	DEK 5/8-11.5 MC NE WS	H.16
1341630000	DEK 5/8-11.5 MC NE WS	H.7
1341630000	DEK 5/8-11.5 MC NE WS	H.9
1346610000	UR20-EBK-ACC	H.7
1346610000	UR20-EBK-ACC	H.9

1420000000

1429420000	THM UR20 WS	H.14
1429420000	THM UR20 WS	H.15
1429420000	THM UR20 WS	H.16
1429420000	THM UR20 WS	H.7
1429420000	THM UR20 WS	H.9
1429430000	ESO UR20 DIN A4 WS	H.14
1429430000	ESO UR20 DIN A4 WS	H.15
1429430000	ESO UR20 DIN A4 WS	H.16
1429430000	ESO UR20 DIN A4 WS	H.7
1429430000	ESO UR20 DIN A4 WS	H.9
1429910000	THM UR20 GE	H.14
1429910000	THM UR20 GE	H.15
1429910000	THM UR20 GE	H.16
1429910000	THM UR20 GE	H.7
1429910000	THM UR20 GE	H.9

1480000000

1481980000	KCMA-32-600-1A-5VA-1	E.6
1481990000	KCMA-32-400-1A-5VA-1	E.6
1482000000	KCMA-18-250-1A-1,5VA-1	E.4
1482010000	KCMA-18-100-1A-1,25VA-3	E.4
1482020000	KCMA-18-50-1A-1VA-3	E.4
1482030000	CMA-31-100-5A-2,5VA-1	E.12
1482040000	CMA-31-75-5A-2,5VA-1	E.12
1482050000	CMA-31-250-5A-5VA-0,5	E.12
1482070000	CMA-31-500-5A-5VA-0,5	E.12
1482080000	CMA-31-750-5A-5VA-0,5	E.12
1487980000	IE-USB-A-MICRO-1.8M	H.14
1487980000	IE-USB-A-MICRO-1.8M	H.15
1487980000	IE-USB-A-MICRO-1.8M	H.16
1487980000	IE-USB-A-MICRO-1.8M	H.7

2420000000

2420710000	KCMA-44-750-5A-5VA-1	E.8
2420720000	KCMA-32-600-5A-5VA-1	E.6
2420730000	KCMA-32-400-5A-5VA-1	E.6
2420740000	KCMA-32-500-5A-5VA-1	E.6
2420750000	KCMA-18-250-1A-4VA-3	E.4
2420760000	KCMA-18-200-1A-3VA-3	E.4
2420770000	KCMA-18-150-1A-2VA-3	E.4
2420780000	KCMA-18-75-1A-1VA-3	E.4
2420890000	CMA-31-750-5A-5VA-1	E.12
2420900000	CMA-31-600-5A-5VA-1	E.12
2420910000	CMA-31-500-5A-5VA-1	E.12
2420920000	CMA-31-400-5A-5VA-1	E.12
2420940000	CMA-31-250-5A-5VA-1	E.12
2420950000	CMA-31-200-5A-5VA-1	E.12
2420960000	CMA-31-150-5A-5VA-1	E.12
2420970000	CMA-31-600-5A-5VA-0,5	E.12
2420980000	CMA-31-400-5A-5VA-0,5	E.12
2420990000	CMA-31-300-5A-5VA-0,5	E.12
2421020000	CMA-31-200-5A-2,5VA-0,5	E.12
2421030000	CMA-31-150-5A-2,5VA-0,5	E.12
2421380000	CMA-31-60-5A-1,25VA-1	E.12
2425490000	ENERGY METER D650	B.13
2425500000	ENERGY ANALYSER 550	C.4
2425500000	ENERGY ANALYSER 550	C.6
2425510000	ENERGY ANALYSER D550	C.4
2425510000	ENERGY ANALYSER D550	C.5
2425520000	ENERGY LOGGER D550	D.3

2430000000

2433030000	ENERGY METER FIXING SET	B.15
2433030000	ENERGY METER FIXING SET	B.16
2433030000	ENERGY METER FIXING SET	B.17
2433030000	ENERGY METER FIXING SET	B.18
2433030000	ENERGY METER FIXING SET	B.19
2433030000	ENERGY METER FIXING SET	B.20
2433040000	ENERGY METER BRACKET B1	C.6
2433040000	ENERGY METER BRACKET B1	C.7
2433060000	ENERGY METER BRACKET L1	B.16
2433060000	ENERGY METER BRACKET L1	B.17
2433060000	ENERGY METER BRACKET L1	B.18
2433060000	ENERGY METER BRACKET L1	B.19
2433060000	ENERGY METER BRACKET L1	B.20
2433070000	ENERGY METER BRACKET S2	B.15
2437370000	KCMA-44-800-5A-5VA-1	E.8
2437400000	KCMA-44-1000-5A-5VA-1	E.8

2440000000

2446170000	ENERGY LOGGER S0 MODULE	D.3

2470000000

2476450000	UR20-FBC-MOD-TCP-V2	H.7

2480000000

2485280000	UR20-PK-2476450000-SP	H.7
2489780000	ENERGY ANALYSER D550-24	C.4
2489780000	ENERGY ANALYSER D550-24	C.5

2490000000

2495610000	ENERGY METER SEAL L96-2	B.15
2495610000	ENERGY METER SEAL L96-2	B.16
2495610000	ENERGY METER SEAL L96-2	B.17
2495610000	ENERGY METER SEAL L96-2	B.18
2495610000	ENERGY METER SEAL L96-2	B.19
2495610000	ENERGY METER SEAL L96-2	B.20
2495630000	ENERGY METER SEAL L144	C.6
2495630000	ENERGY METER SEAL L144	C.7

2500000000

2500860000	ENERGY METER 520-24	B.13
2500860000	ENERGY METER 520-24	B.15
2500870000	ENERGY METER 700-PN-24	B.13
2500870000	ENERGY METER 700-PN-24	B.19
2500880000	ENERGY METER 520-230	B.13
2500880000	ENERGY METER 520-230	B.15
2500890000	ENERGY METER 700-PN-230	B.13
2500890000	ENERGY METER 700-PN-230	B.19

2520000000

2525150000	CMA-CTM-7-32-1A-0.2VA-1	E.11

2530000000

2534130000	ENERGY ANALYSER 750-230	C.4
2534130000	ENERGY ANALYSER 750-230	C.7
2534160000	ENERGY ANALYSER 750-24	C.4
2534160000	ENERGY ANALYSER 750-24	C.7

2540000000

2540830000	ENERGY METER D370-CBM	B.13
2540830000	ENERGY METER D370-CBM	B.14
2540850000	ENERGY METER 610-230	B.13
2540850000	ENERGY METER 610-230	B.17
2540860000	ENERGY METER 610-PB-24	B.13
2540860000	ENERGY METER 610-PB-24	B.18
2540870000	ENERGY METER 610-PB-230	B.13
2540870000	ENERGY METER 610-PB-230	B.18
2540880000	ENERGY METER 525-24	B.13
2540880000	ENERGY METER 525-24	B.16
2540890000	ENERGY METER 525-230	B.13
2540890000	ENERGY METER 525-230	B.16
2540900000	ENERGY METER 750-24	B.13
2540900000	ENERGY METER 750-24	B.20
2540910000	ENERGY METER 750-230	B.13
2540910000	ENERGY METER 750-230	B.20
2540920000	ENERGY METER 610-24	B.13
2540920000	ENERGY METER 610-24	B.17

2550000000

2556010000	CMA-CTM-7-64-1A-0.5VA-1	E.11
2556030000	CMA-CTM-7-50-1A-0.4VA-1	E.11

2570000000

2570120000	UR20-PK-2674620000-SP	H.15

2590000000

2593340000	RCMA-B22-D70-4.5	E.20
2593350000	RCMA-B22-D125-4.5	E.20
2593360000	RCMA-B22-D175-4.5	E.20
2593370000	RCMA-B22-D70-1.5	E.20
2593380000	RCMA-B22-D125-1.5	E.20
2593390000	RCMA-B22-D175-1.5	E.20
2593400000	RCMC-5000-1A-P	E.20
2593410000	RCMC-5000-AO-P	E.20

2600000000

2602580000	ENERGY ANALYSER 550-24	C.4
2602580000	ENERGY ANALYSER 550-24	C.6
2603420000	CMA-RCM-DACT-20	E.14
2603430000	CMA-RCM-DACT-35	E.14
2603440000	CMA-RCM-DACT-60	E.14
2603450000	CMA-RCM-DACT-120	E.14
2605360000	UR20-PK-1334950000-SP	H.16

2630000000

2638920000	UC20-SL2000-0LAC-EC	H.14

2650000000

2655590000	UC20-SL2000-0LAC-EC-CAN	H.15
2656270000	KCMA-RCM-23D	E.16
2656280000	KCMA-RCM-58D	E.16
2656290000	KCMA-RCM-812D	E.16
2659700000	UR20-FBC-MOD-TCP-ECO	H.9

2660000000

2660130000	U-CREATE-STUDIO	H.14
2660130000	U-CREATE-STUDIO	H.15
2665170000	UR20-PK-2674520000-SP	H.14

2670000000

2674520000	UC20-SL2000-EC	H.14
2674620000	UC20-SL2000-EC-CAN	H.15

2680000000

2680150000	CMA-41-1000-5A-5VA-1	E.12
2680160000	CMA-51-1250-5A-5VA-1	E.12
2680170000	CMA-61-1500-5A-5VA-1	E.12
2680180000	CMA-81-2000-5A-10VA-1	E.12
2680190000	CMA-101-2500-5A-10VA-1	E.12
2680200000	CMA-31-125-5A-2,5VA-0,5	E.12
2680210000	CMA-41-1000-5A-5VA-0,5	E.12
2680220000	CMA-51-1250-5A-5VA-0,5	E.12
2680230000	CMA-61-1500-5A-5VA-0,5	E.12
2680240000	CMA-81-2000-5A-10VA-0,5	E.12
2680250000	CMA-101-2500-5A-10VA-0,5	E.12
2682620000	IOT-GW30	G.7
2682620000	IOT-GW30	H.24
2682630000	IOT-GW30-4G-EU	G.7
2682630000	IOT-GW30-4G-EU	H.24
2684400000	SD-CARD-8GB	H.14
2684400000	SD-CARD-8GB	H.15
2684400000	SD-CARD-8GB	H.16
2684410000	BATTERY-CR1220-3V	H.14
2684410000	BATTERY-CR1220-3V	H.15
2684410000	BATTERY-CR1220-3V	H.16

2700000000

2702610000	UR20-PK-2659700000-SP	H.9
2708630000	U-CREATE-PROCON-WEB-RT-ES-2000	J.6

2710000000

2716650000	PNP-16-MOD-TCP	F.6
2716660000	PNP-32-MOD-TCP	F.6
2716670000	PNP-63-MOD-TCP	F.7
2716690000	PNP-U-MOD-TCP	F.7

2720000000

2722630000	U-CREATE-STUDIO-ANNUAL	H.14
2722630000	U-CREATE-STUDIO-ANNUAL	H.15
2728090000	KCMA-8-250-5A-1.5VA1	E.10
2728100000	KCMA-8-500-5A-5VA1	E.10
2728110000	KCMA-8-750-5A-2VA1	E.10
2728130000	KCMA-8-1000-5A-10VA1	E.10
2728140000	KCMA-8-1200-5A-10VA1	E.10
2728150000	KCMA-8-1500-5A-15VA1	E.10
2728160000	KCMA-8-2000-5A-15VA1	E.10
2728170000	KCMA-8-2500-5A-15VA1	E.10
2728180000	KCMA-8-3000-5A-15VA1	E.10
2728190000	KCMA-8-4000-5A-15VA1	E.10
2728210000	KCMA-8-5000-5A-15VA1	E.10

2730000000

2739330000	IE-UD50KW-MODBUS-W	G.10

2750000000

2751260000	US67-V1T-BLE	G.4
2752980000	KCMA-18-125-1A-1,5VA-3	E.4
2752990000	KCMA-18-100-1A-0.3VA-1	E.4
2753000000	KCMA-18-125-1A-0.5VA-1	E.4
2753010000	KCMA-18-150-1A-1VA-1	E.4
2753020000	KCMA-18-200-1A-1.5VA-1	E.4
2753030000	KCMA-18-150-5A-1VA-1	E.4
2753040000	KCMA-18-200-5A-1,5VA-1	E.4
2753050000	KCMA-18-250-5A-1VA-0.5	E.4
2753060000	KCMA-28-200-1A-0.3VA-1	E.5
2753070000	KCMA-28-250-1A-1VA-1	E.5
2753080000	KCMA-28-300-1A-1.5VA-1	E.5
2753090000	KCMA-28-400-1A-2.5VA-1	E.5
2753100000	KCMA-28-500-1A-1VA-0.5	E.5
2753110000	KCMA-28-250-5A-1VA-1	E.5
2753120000	KCMA-28-300-5A-1.5VA-1	E.5
2753130000	KCMA-28-400-5A-2.5VA-1	E.5
2753140000	KCMA-28-500-5A-3VA-1	E.5
2753150000	KCMA-42-250-1A-2.5VA-1	E.7
2753160000	KCMA-42-300-1A-2.5VA-1	E.7
2753170000	KCMA-42-400-1A-2.5VA-0.5	E.7
2753180000	KCMA-42-500-1A-2.5VA-0.5	E.7
2753190000	KCMA-42-600-1A-2.5VA-0.5	E.7
2753200000	KCMA-42-750-1A-2.5VA-0.5	E.7
2753210000	KCMA-42-800-1A-2.5VA-0.5	E.7
2753220000	KCMA-42-1000-1A-2.5VA-0.5	E.7
2753230000	KCMA-42-300-5A-2.5VA-1	E.7
2753240000	KCMA-42-400-5A-5VA-1	E.7
2753250000	KCMA-42-500-5A-5VA-1	E.7
2753260000	KCMA-42-600-5A-2.5VA-0.5	E.7
2753270000	KCMA-42-750-5A-2.5VA-0.5	E.7
2753280000	KCMA-42-800-5A-2.5VA-0.5	E.7
2753290000	KCMA-42-1000-5A-2.5VA-0.5	E.7
2753360000	KCMA 5-250-5A-1.5VA-1	E.9
2753370000	KCMA 5-400-5A-1VA-0.5	E.9
2753380000	KCMA 5-500-5A-2.5VA-0.5	E.9
2753390000	KCMA 5-600-5A-2.5VA-0.5	E.9
2753400000	KCMA 5-1000-5A-5VA-0.5	E.9
2753410000	KCMA-8-600-5A-2.5VA-0.5	E.10
2753420000	KCMA-8-800-5A-2.5VA-0.5	E.10
2753430000	KCMA-8-1000-5A-5VA-0.5	E.10
2753450000	KCMA-8-1200-5A-5VA-0.5	E.10
2757620000	US67-BAT-COSL	G.5

2810000000

2811910000	US67-PLATE64-STD	G.5

2830000000

2831090000	RCMA-B22-D70-6.0	E.20
2831100000	RCMA-B22-D125-6.0	E.20
2831110000	RCMA-B22-D175-6.0	E.20

2850000000

2857250000	PWEB-ES-RT-50/2	J.6
2857260000	PWEB-ES-RT-50/5	J.6
2857270000	PWEB-ES-RT-50/10	J.6
2857280000	PWEB-ES-RT-100/2	J.6
2857290000	PWEB-ES-RT-100/5	J.6
2857300000	PWEB-ES-RT-100/10	J.6
2857310000	PWEB-ES-RT-500/2	J.6
2857320000	PWEB-ES-RT-500/5	J.6
2857330000	PWEB-ES-RT-500/10	J.6
2857340000	PWEB-ES-RT-1000/2	J.6
2857350000	PWEB-ES-RT-1000/5	J.6
2857360000	PWEB-ES-RT-1000/10	J.6
2857380000	PWEB-ES-RT-2000/2	J.6
2857390000	PWEB-ES-RT-2000/5	J.6
2857400000	PWEB-ES-RT-2000/10	J.6
2857420000	PWEB-SCADA-RT-500/2	J.6
2857430000	PWEB-SCADA-RT-500/5	J.6
2857470000	PWEB-SCADA-RT-500/10	J.6
2857480000	PWEB-SCADA-RT-1000/2	J.6
2857520000	PWEB-SCADA-RT-1000/5	J.6
2857530000	PWEB-SCADA-RT-1000/10	J.6
2857540000	PWEB-SCADA-RT-2000/2	J.6
2857550000	PWEB-SCADA-RT-2000/5	J.6
2857560000	PWEB-SCADA-RT-2000/10	J.6
2857570000	PWEB-SCADA-RT-5000/2	J.6
2857580000	PWEB-SCADA-RT-5000/5	J.6
2857600000	PWEB-SCADA-RT-5000/10	J.6
2857610000	PWEB-SCADA-RT-10000/2	J.6
2857620000	PWEB-SCADA-RT-10000/5	J.6
2857630000	PWEB-SCADA-RT-10000/10	J.6
2857650000	PWEB-DESIGNER-PRO	J.3

2860000000

2862170000	PWEB-SCADA-RT-30000/2	J.6
2862180000	PWEB-SCADA-RT-30000/5	J.6
2862190000	PWEB-SCADA-RT-30000/10	J.6
2862200000	PWEB-SCADA-RT-60000/2	J.6
2862210000	PWEB-SCADA-RT-60000/5	J.6
2862220000	PWEB-SCADA-RT-60000/10	J.6
2862230000	PWEB-SCADA-RT-PRO/2	J.6

Order No.	Type	Page
2862240000	PWEB-SCADA-RT-PRO/5	J.6
2862250000	PWEB-SCADA-RT-PRO/10	J.6
2865880000	RCMA-B22-D300-6.0	E.20

2870000000

2874720000	US67-USB-STICK-BLE	G.6
2875320000	PWEB-ES-RT-5000/2	J.6
2875330000	PWEB-ES-RT-5000/5	J.6
2875340000	PWEB-ES-RT-5000/10	J.6
2875350000	PWEB-SCADA-RT-1000/20	J.6
2875360000	PWEB-SCADA-RT-500/20	J.6
2875370000	PWEB-SCADA-RT-2000/20	J.6
2875380000	PWEB-SCADA-RT-5000/20	J.6
2875390000	PWEB-SCADA-RT-10000/20	J.6
2875400000	PWEB-SCADA-RT-30000/20	J.6
2875410000	PWEB-SCADA-RT-60000/20	J.6
2875900000	PWEB-SCADA-RT-PRO/20	J.6

7760000000

7760051001	EM111-RTU-2P	B.4
7760051001	EM111-RTU-2P	B.6
7760051002	EM110-RTU-2P	B.4
7760051002	EM110-RTU-2P	B.6
7760051003	EM122-RTU-2P	B.4
7760051003	EM122-RTU-2P	B.7
7760051004	EM120-RTU-2P	B.4
7760051004	EM120-RTU-2P	B.7
7760051005	EM220-RTU-4DI2DO	B.4
7760051005	EM220-RTU-4DI2DO	B.8
7760051006	EM220-RTU-4DI2DO-GW	B.4
7760051006	EM220-RTU-4DI2DO-GW	B.8

8000000000

8000028950	EM-CONNECTIVITY-BOX 96	F.10
8000028951	EM-CONNECTIVITY-BOX TS	F.10
8000028952	EM-CONNECTIVITY-BOX 144	F.10
8000058270	FP IOT MD01 4EU S2 00000	G.6
8000058603	FP IOT MD01 LAN S2 00000	G.6
8000100996	EM CONNECTOR CURRENT ATTB	E.21
8000100997	EM CONNECTOR VOLTAGE ATTB	E.21

Addresses worldwide

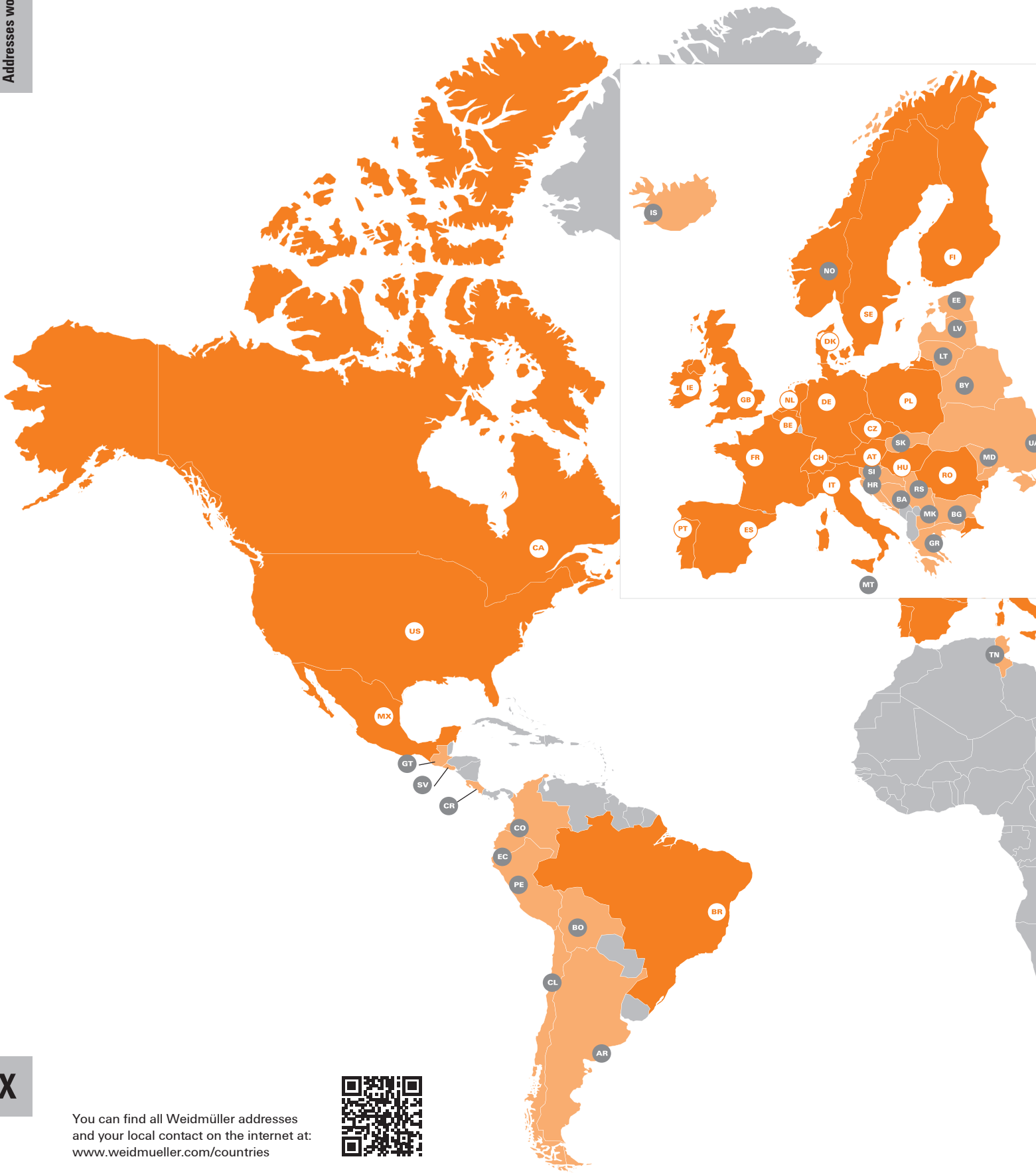

You can find all Weidmüller addresses and your local contact on the internet at: www.weidmueller.com/countries

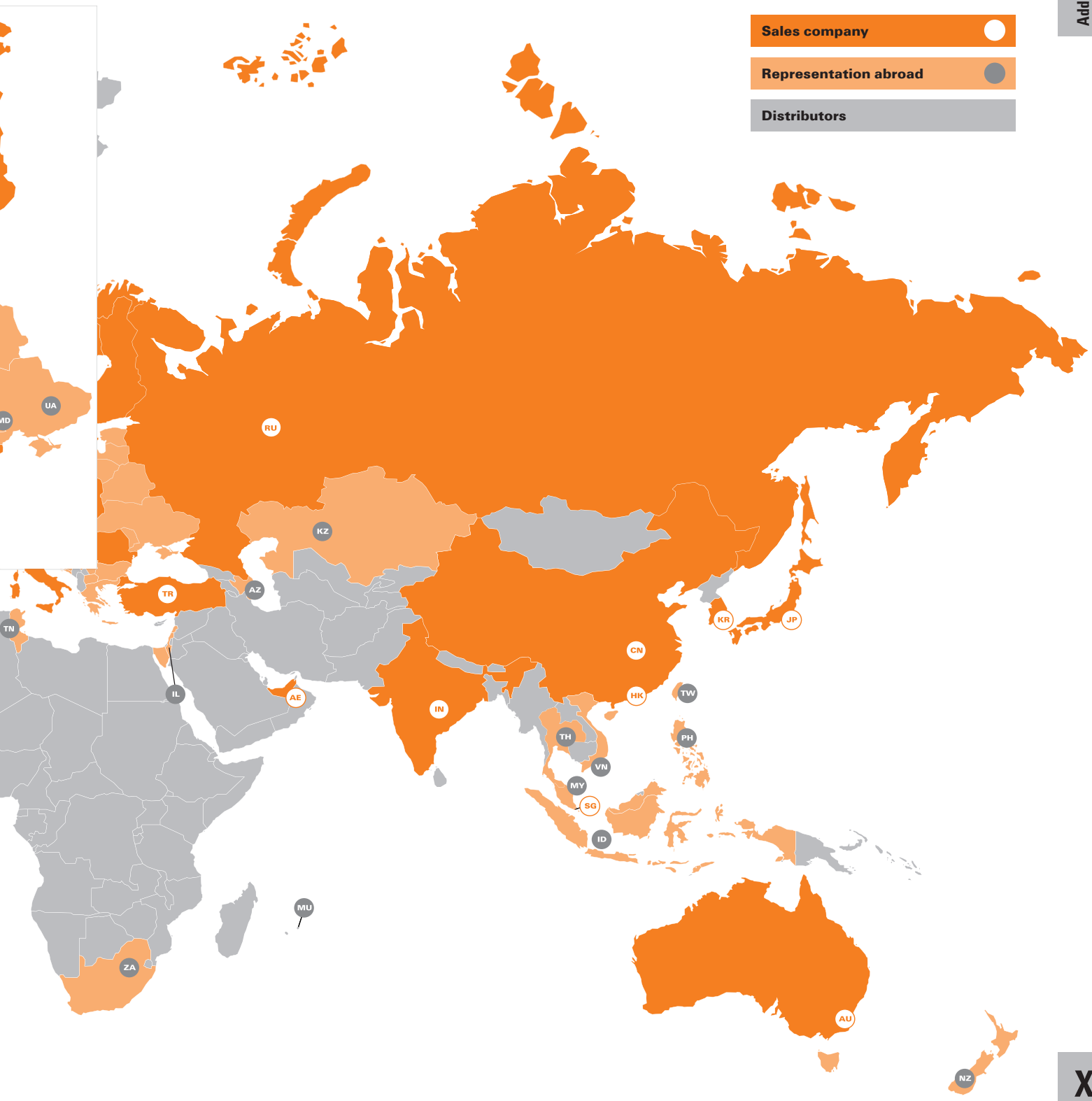
Sales company
Representation abroad
Distributors
UA
RU
KZ
TR
AZ
TN
IL
AE
IN
CN
KR
JP
HK
TW
TH
PH
VN
MY
SG
ID
MU
ZA
AU
NZ

We cannot guarantee that there are no mistakes in the publications or software provided by us to the customer for the purpose of making orders. We try our best to quickly correct errors in our printed media.

All orders are based on our general terms of delivery, which can be reviewed on the websites of our group companies where you place your order. On demand we can also send the general terms of delivery to you.

Weidmüller – Your partner in Industrial Connectivity

As experienced experts we support our customers and partners around the world with products, solutions and services in the industrial environment of power, signal and data. We are at home in their industries and markets and know the technological challenges of tomorrow. We are therefore continuously developing innovative, sustainable and useful solutions for their individual needs. Together we set standards in Industrial Connectivity.

Technical Guide

More detailed information on our measuring and monitoring systems is available on our website. In addition we offer a Technical Guide with comprehensive technical basic knowledge related to the subject of energy monitoring.

www.weidmueller.com/energymonitoring

Weidmüller Interface GmbH & Co. KG
Klingenbergstraße 26
32758 Detmold, Germany
T +49 5231 14-0
F +49 5231 14-292083
www.weidmueller.com

Personal support can be found on our website:
www.weidmueller.com/contact

Made in Germany

4 064675 857051

Bestellnummer: 2886810000/10/2022/SMD