Technical Data

Allen-Bradley

Control and Load Switch Specifications

Bulletin Number 194E, 194L

Additional Resources

These documents contain additional information concerning related products from Rockwell Automation.

Resource	Description
Industrial Automation Wiring and Grounding Guidelines, publication 1770-4.1	Provides general guidelines for installing a Rockwell Automation industrial system.
Product Certifications website, http://www.ab.com	Provides declarations of conformity, certificates, and other certification details.

You can view or download publications at http://www.rockwellautomation.com/literature/. To order paper copies of technical documentation, contact your local Allen-Bradley distributor or Rockwell Automation sales representative.

		 
	Bulletin 194E	Bulletin 194L
Product Type	Inductive load-rated load switch	Inductive load-rated control/load switch
Current Range	16…100 A	12…40 A
Main Applications	UL, CSA ratings "suitable as at-motor disconnect"	UL, CSA ratings "suitable as at-motor disconnect"
Functionality	• 3- or 6-pole switch configurations for OFF-ON or changeover applications (16…100 A switches)	• 1- to 6-pole multifunction switch control configurations for OFF-ON, changeover, Star-Delta (Wye-Delta), reversing, ammeter, voltmeter, and step switch applications • Also available in custom control configurations up to 16 circuits for any unique control switching application.
Mounting Styles	Front/door or base/DIN Rail mounting	Front/door or base/DIN Rail mounting
Handles	• Handle colors in grey/black and red/yellow and padlockable versions • Legend plates available in 0-I international markings and text styles	• Uniformly styled handles: selector knob, disk style, rectangular style, and key-operated versions (Type 1/12, IP66) • Handle colors in grey/black and red/yellow and padlockable versions • Legend plates available in 0-I international markings and text styles
Open Switch or Enclosed	• Open switch (large frame Bul. 194E — open style only) • Enclosed: IP66 thermoplastic enclosure or UL/CSA rated enclosure	Open switch
UL/CSA Electrical Ratings: Rated Voltage U_e	600V AC	600V AC
Rated Current I_e	16…100 A @ 600V	12…40 A @ 600V
Rated Power P_e [FLA]	Varies w/ 1- or 3-phase switch, voltage	Varies w/ 1- or 3-phase switch, voltage
Short-Circuit Ratings	5 kA	5 kA
Switching Rate [ops/h]	120	120
Mechanical Life [ops]	0.2 million (16…100 A switches)	1 million
IEC Rated Current I_e AC-1	16…100 A @ 600V	12…40 A @ 600V
AC-21A	16…100 A @ 600V	12…40 A @ 600V
AC-22A	16…100 A @ 600V	12…40 A @ 600V
Ambient Operational Temp.	-25…+60 °C (-13…+140 °F)	-25…+60 °C (-13…+140 °F)
Ambient Enclosed Temp.	-20…+60 °C (-4…+140 °F)	-20…+60 °C (-4…+140 °F)
Ambient Storage Temp.	-40…+80 °C (-40…+176 °F)	-40…+80 °C (-40…+176 °F)
Protection class per IEC 529	Switch bodies: IP2	Switch bodies: IP2
Optional Accessories	• IP66 handles • Multi-length shafts and shaft extension kits • Terminal covers	• Multi-length shafts and shaft extension kits • Terminal covers
Standards/Certifications	• UL 508 • CSA C22.2, No. 14 • IEC 60947-3 Low Voltage Switchgear and Controlgear part 3 • CE	• UL 508 • CSA C22.2, No. 14 • IEC 60947-3 Low Voltage Switchgear and Controlgear part 3 • CE

Switching Diagrams

Contact target tables: X = Contact Closed
[Blank] = Contact Open

Circuit Diagram Nos. 1501…4253

1501/1751 1781

Elem.	Cont.	Pos. 0	Pos. 1
1	3-4		
	1-2		X

1502/1752 1782

Elem.	Cont.	Pos. 0	Pos. 1
1	3-4		X
	1-2		X

1503/1753 1783

Elem.	Cont.	Pos. 0	Pos. 1
2	7-8		
	5-6		X
1	3-4		X
	1-2		X

1505/1755

Elem.	Cont.	Pos. 0	Pos. 1
3	11-12		
	9-10		X
2	7-8		X
	5-6		X
1	3-4		X
	1-2		X

1505/1755

Elem.	Cont.	Pos. 0	Pos. 1
3	11-12		
	9-10		X
2	7-8		X
	5-6		X
1	3-4		X
	1-2		X

1506/1756

Elem.	Cont.	Pos. 0	Pos. 1
3	11-12		X
	9-10		X
2	7-8		X
	5-6		X
1	3-4		X
	1-2		X

2251/2501

Elem.	Cont.	Pos. 1	Pos. 2
1	3-4	X	
	1-2		X

2252/2502

Elem.	Cont.	Pos. 1	Pos. 2
2	7-8	X	
	5-6		X
1	3-4	X	
	1-2		X

2253/2503

Elem.	Cont.	Pos. 1	Pos. 2
3	11-12	X	
	9-10		X
2	7-8	X	
	5-6		X
1	3-4	X	
	1-2		X

2254/2504

Elem.	Cont.	Pos. 1	Pos. 2
4	15-16	X	
	13-14		X
3	11-12		X
	9-10		X
2	7-8	X	
	5-6		X
1	3-4	X	
	1-2		X

2255/2505

Elem.	Cont.	Pos. 1	Pos. 2
5	19-20	X	
	17-18		X
4	15-16	X	
	13-14		X
3	11-12	X	
	9-10		X
2	7-8	X	
	5-6		X
1	3-4	X	
	1-2		X

3001/3261

Elem.	Cont.	Pos. 1	Pos. 0	Pos. 2
1	3-4	X		
	1-2			X

3002/3262

Elem.	Cont.	Pos. 1	Pos. 0	Pos. 2
2	7-8	X		
	5-6			X
1	3-4	X		
	1-2			X

3003/3263

Elem.	Cont.	Pos. 1	Pos. 0	Pos. 2
3	11-12	X		
	9-10			X
2	7-8	X		
	5-6			X
1	3-4	X		
	1-2			X

3251/3501 3751

Elem.	Cont.	Pos. 1	Pos. 0	Pos. 2
1	3-4	X		
	1-2			X

3252/3502 3752

Elem.	Cont.	Pos. 1	Pos. 0	Pos. 2
2	7-8	X		
	5-6			X
1	3-4	X		
	1-2			X

3254/3504/3754

Elem.	Cont.	Pos. 1	Pos. 0	Pos. 2
4	15-16	X		
	13-14			X
3	11-12	X		
	9-10			X
2	7-8	X		
	5-6			X
1	3-4	X		
	1-2			X

3253/3503/3753

Elem.	Cont.	Pos. 1	Pos. 0	Pos. 2
3	11-12	X		
	9-10			X
2	7-8	X		
	5-6			X
1	3-4	X		
	1-2			X

4252

Elem.	Cont.	Pos. 1	Pos. 2	Pos. 3
3	11-12	X		
	9-10			X
2	7-8		X	
	5-6		X	
1	3-4	X		
	1-2			X

4253

Elem.	Cont.	Pos. 1	Pos. 2	Pos. 3
5	19-20		X	
	17-18			
4	15-16	X		
	13-14			X
3	11-12	X		
	9-10			X
2	7-8		X	
	5-6		X	
1	3-4	X		
	1-2			X

Circuit Diagram Nos. 4271…5531

4271
4521

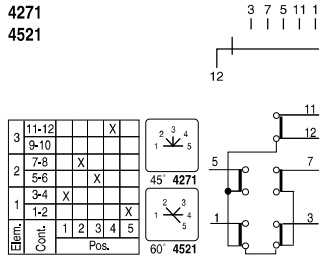

Elem.	Cont.	1	2	3	4	5
3	11-12				X	
	9-10					
2	7-8		X			
	5-6			X		
1	3-4	X				
	1-2					X

4251
4501

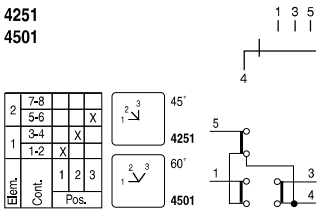

Elem.	Cont.	1	2	3
2	7-8			
	5-6			X
1	3-4		X	
	1-2	X		

4261
4511

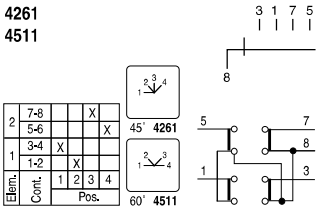

Elem.	Cont.	1	2	3	4
2	7-8			X	
	5-6				X
1	3-4	X			
	1-2		X		

4262
4512

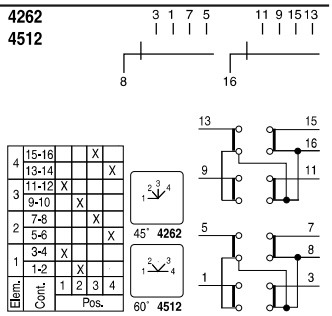

Elem.	Cont.	1	2	3	4
4	15-16			X	
	13-14				X
3	11-12	X			
	9-10		X		
2	7-8			X	
	5-6				X
1	3-4	X			
	1-2		X		

4263
4513

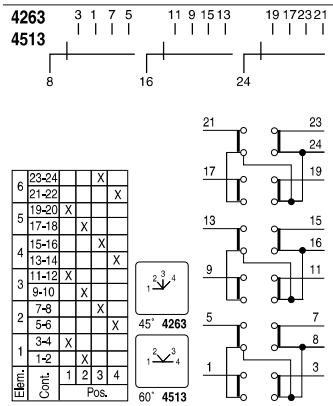

Elem.	Cont.	1	2	3	4
6	23-24			X	
	21-22				X
5	19-20	X			
	17-18		X		
4	15-16			X	
	13-14				X
3	11-12	X			
	9-10		X		
2	7-8			X	
	5-6				X
1	3-4	X			
	1-2		X		

4281
4531

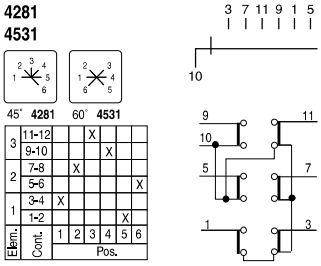

Elem.	Cont.	1	2	3	4	5	6
3	11-12			X			
	9-10				X		
2	7-8		X				
	5-6						X
1	3-4	X					
	1-2					X	

4502

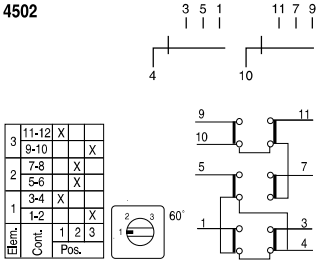

Elem.	Cont.	1	2	3
3	11-12	X		
	9-10			X
2	7-8		X	
	5-6		X	
1	3-4	X		
	1-2			X

4503

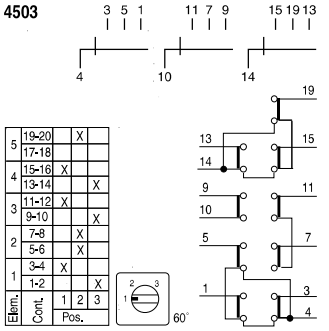

Elem.	Cont.	1	2	3
5	19-20		X	
	17-18			
4	15-16	X		
	13-14			X
3	11-12	X		
	9-10			X
2	7-8		X	
	5-6		X	
1	3-4	X		
	1-2			X

5001
5271
5521

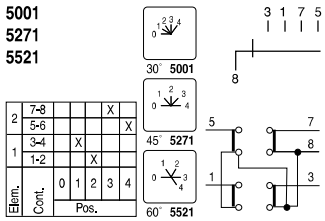

Elem.	Cont.	0	1	2	3	4
2	7-8				X	
	5-6					X
1	3-4		X			
	1-2			X		

5002
5272
5522

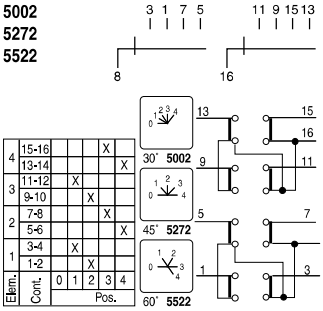

Elem.	Cont.	0	1	2	3	4
4	15-16				X	
	13-14					X
3	11-12		X			
	9-10			X		
2	7-8				X	
	5-6					X
1	3-4		X			
	1-2			X		

5003/5273/5523

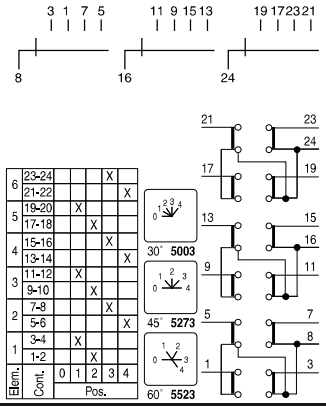

Elem.	Cont.	0	1	2	3	4
6	23-24				X	
	21-22					X
5	19-20		X			
	17-18			X		
4	15-16				X	
	13-14					X
3	11-12		X			
	9-10			X		
2	7-8				X	
	5-6					X
1	3-4		X			
	1-2			X		

5011
5281
5531

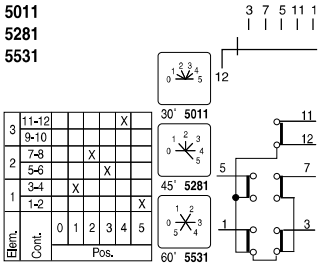

Elem.	Cont.	0	1	2	3	4	5
3	11-12					X	
	9-10						
2	7-8			X			
	5-6				X		
1	3-4		X				
	1-2						X

Circuit Diagram Nos. 5012...5272

5012
5282
5532

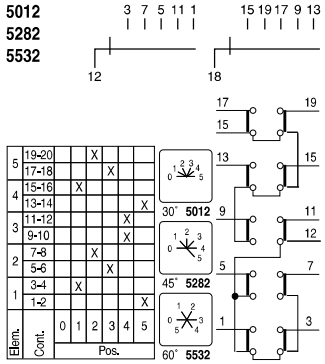

5013/5283/5533

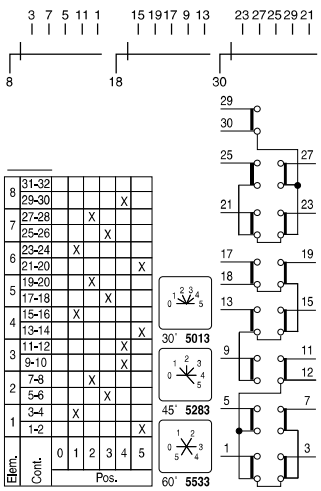

5251
5501

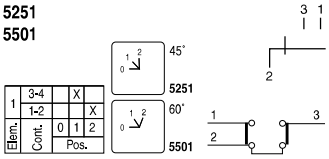

5252
5502

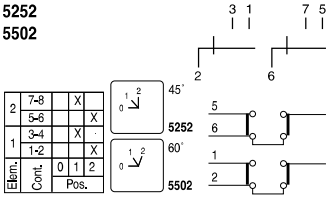

5252
5502

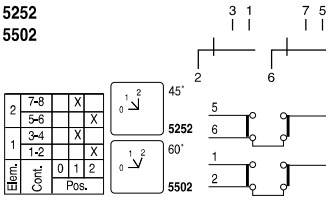

5261/5511

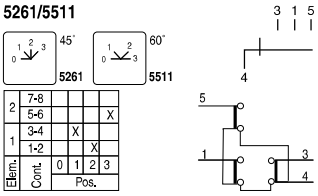

5262
5512

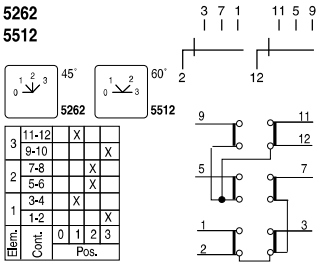

5263
5513

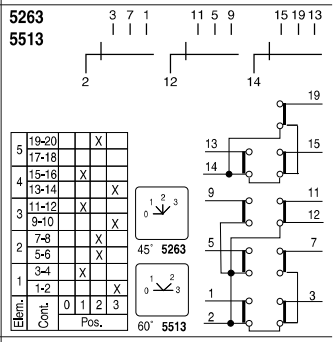

5271

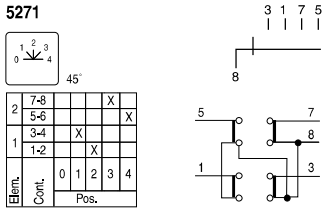

5272

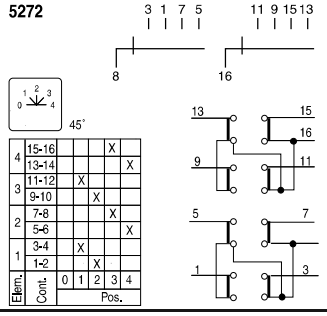

Circuit Diagram Nos. 5273...8771

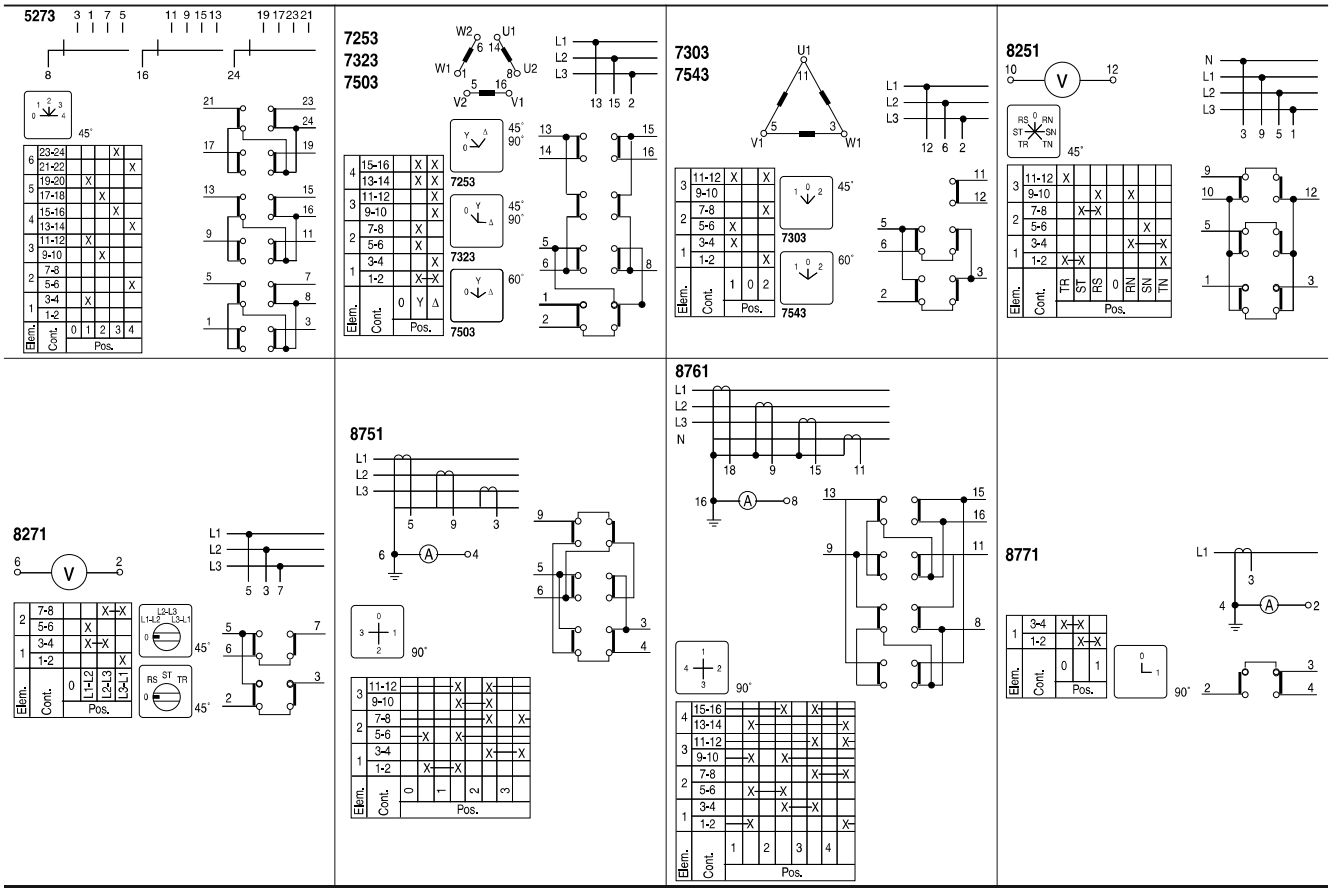

Electrical Ratings

Performance Data					12 A	16 A	20 A	25 A	32 A	40 A
IEC Applications										
Rated voltage U_e ★		IEC-947		[V]	690	690	690	690	690	690
Isolating conditions acc. to VDE fulfilled up to rated impulse voltage *U*imp				[kV]	6	6	6	6	8	8
Thermal rated current I_{th}★	40 °C	IEC-947		[A]	16	20	25	30	32	45
Thermal rated current I_{the}	60 °C	IEC-947		[A]	12	16	20	25	32	45
Rated current I_e★										
AC-1/ AC-21A	Non-inductive or slightly inductive loads/ switching of resistive loads with slight overload	IEC-947	690V	[A]	12	16	20	25	32	40
AC-1	Non-inductive or slightly inductive loads	SEV	660V	[A]	12	16	20	25	32	40
AC22A	Switching of mixed resistive and inductive loads with slight overload	IEC-947	220…500V 690V	[A] [A]	12 12	16 16	20 20	25 25	32 32	40 40
AC-15	Switching of inductive drives, motors, valves, and electromagnets.	IEC-947	220…240V 380…415V 500V	[A] [A] [A]	5 3 2	6 4 2.5	7 5 3	8 6 4	—	—
DC switching capacity Rated current I_e		Contacts in series								
	Rated Voltage [V]	1 2 3 4 5 6 8								
		24 48 72 96 120 144 192		[A]	12	16	20	22	—	—
		48 96 144 192 240 288 384		[A]	10	12	16	18	—	—
		60 120 180 240 300 360 450		[A]	8	10	12	14	32	40
DC-21A	For resistive loads, T ≤ 1ms	110 220 330 440 550 660 —		[A]	2	2.5	4	5	—	—
		220 440 660 — — — —		[A]	0.5	0.6	0.7	0.8	—	—
	U_e max = 600V	440 — — — — — —		[A]	0.4	0.4	0.5	0.5	—	—
Rated making/breaking capacity (= 1.5 x I_e)										
		25.2 50.4 75.6 100.8 126 151.2 201.6		[A]	18	24	30	33	—	—
	1.05 x Rated voltage [V]	50.4 100.8 151.2 201.6 252 302.4 403.2		[A]	15	21	24	27	—	—
	For resistive loads, T I_{th} 1ms	63 126 189 252 315 378 504		[A]	12	18	18	21	48	60
		115.5 231 346.5 462 577.5 — —		[A]	3	4.5	6	7.5	—	—
	U_e max = 600V	231 462 — — — — —		[A]	0.75	1.12	1.05	1.2	—	—
		462 — — — — — —		[A]	0.52	0.78	0.47	0.75	—	—
Rated current I_e										
	Rated voltage [V]	24 48 72 96 120 144 192		[A]	8	10	12	14	16	16
		30 60 90 120 150 180 240		[A]	4.5	5.5	7	8	—	—
	For inductive loads T = 50 ms	48 96 144 192 240 288 384		[A]	1.5	2	2.5	3	8	8
	Rated voltage [V]	60 120 180 240 300 360 450		[A]	1	1.2	1.5	1.8	4.8	4.8
		110 220 330 440 550 660 —		[A]	0.4	0.5	0.6	0.7	2	2
		220 — — — — — —		[A]	—	—	—	—	0.6	0.6
Rated making/breaking capacity (= 1.1 x I_e)										
	1.1 x Rated voltage [V]	26.4 52.8 79.2 105.6 132 158.4 184.8		[A]	8.8	11	13.2	1.54	—	17.6
		33 66 99 132 165 198 231		[A]	4.95	6.05	7.7	8.8	—	—
	For inductive loads T = 50 ms	52.8 105.6 158.4 211.2 264 316.8 369.6		[A]	1.65	2.2	2.75	3.3	8.8	8.8
	U_e max = 600V	66 132 198 264 330 396 462		[A]	1.1	1.32	1.65	1.98	5.28	5.28
		121 242 363 484 605 — —		[A]	4.95	6.05	7.7	8.8	2.2	2.2
Power Lost				[W]	0.3	0.5	0.6	0.9	0.8	1.4
Rated power P_e		Contacts in series								
Rated voltage [V] DC-23A, DC-3, DC-5 For inductive loads, T ≤1 ms		24	1	[kW]	0.12	0.15	0.20	0.25	0.30	0.30
		24	2	[kW]	0.20	0.25	0.30	0.37	—	—
		48	2	[kW]	0.25	0.30	0.37	0.50	0.50	0.50
		48	3	[kW]	0.30	0.37	0.50	0.75	—	—
		60	2	[kW]	0.25	0.30	0.37	0.50	1.00	1.00
		60	4	[kW]	0.37	0.50	0.75	1.00	—	—
		110	4	[kW]	0.50	0.75	1.00	1.20	—	—
		110	6	[kW]	1.00	1.20	1.40	1.60	—	—
		220	4	[kW]	0.37	0.50	0.75	1.00	—	—
		220	6	[kW]	1.00	1.20	1.40	1.50	—	—

★See standards compliance listed on http://ab.rockwellautomation.com/Circuit-and-Load-Protection/Disconnect-Switches/Non-Visible-Blade/194R-Fused-Non-Fused-Disconnect-Switches#specifications

Performance Data, Continued				12 A	16 A	20 A	25 A	32 A	40 A
IEC Applications, Continued									
Rated making/breaking capacity (= 4 x I_e)		Contacts in series							
Rated Voltage [V]	25.2	1	[A]	20.0	25.0	33.3	41.6	50.0	50.0
DC-23A, DC-3, DC-5	25.2	2	[A]	33.3	41.6	50.0	61.6	—	—
For inductive loads, T ≤ 7.5 ms	50.4	2	[A]	21.0	25.0	30.8	41.6	41.6	41.6
	50.4	3	[A]	25.0	30.8	42.0	62.4	—	—
	63	2	[A]	16.6	20.0	24.6	33.2	66.6	66.6
	63	4	[A]	24.6	33.3	50.0	66.4	—	—
	115.5	4	[A]	18.1	27.2	36.4	44.0	—	—
	115.5	6	[A]	36.4	43.6	51.0	58.2	—	—
	231	4	[A]	6.7	9.1	13.6	18.2	—	—
	231	6	[A]	18.1	21.8	25.2	27.2	—	—
Rated breaking capacity		at 220V 0.45 [cos j]	[A]	72	96	128	176	296	296
		at 380V 0.45 [cos j]	[A]	72	96	128	176	280	336
		at 660V 0.45[cos j]	[A]	53	72	86	112	196	196
Rated power P_e★	IEC-947								
AC-2 Slip-ring motors: starting, reversing and electric braking; star/delta starting	3-phase 3-pole	240V	[kW]	3	4	5.5	5.5	—	—
		380V	[kW]	5.5	7.5	9	13	—	—
		415V	[kW]	5.5	7.5	9	13	—	—
		440V	[kW]	5.5	7.5	9	13	—	—
		500V	[kW]	7.5	10	11	15	—	—
		660V	[kW]	7.5	10	11	15	—	—
AC-3 Squirrel-cage motors: starting and stopping of running motors	IEC-947								
	3-phase 3-pole	220…240V	[kW]	2.2	3	4.5	5.5	7.5	7.5
		380…440V	[kW]	4	5.5	7.5	11	15	18.5
		500V	[kW]	5.5	7.5	10	13	—	—
		660V	[kW]	5.5	7.5	8	11	18.5	18.5
	1-phase 2-pole	110V	[kW]	0.75	1.1	1.2	1.6	—	—
		220…240V	[kW]	1.3	2.2	2.5	3.2	4	4
		380…440V	[kW]	2.2	3.7	4.5	5.5	8	16
AC-4 Squirrel-cage motors: starting, reversing, electric braking, inching	IEC-947								
	3-phase 3-pole	220…240V	[kW]	0.75	1.5	3	4	5.5	5.5
		380…415V	[kW]	1.5	2.2	3.7	5.5	7.5	7.5
		440…550V	[kW]	1.5	2.2	3.7	5.5	7.5	11
	1-phase 2-pole	110V	[kW]	0.18	0.37	0.55	0.75	—	—
		240V	[kW]	0.37	0.75	1.5	2.2	—	—
		380V	[kW]	0.75	1.1	1.8	3	—	—
		440V	[kW]	0.75	1.1	1.8	3	—	—

★See standards compliance listed on http://ab.rockwellautomation.com/Circuit-and-Load-Protection/Disconnect-Switches/Non-Visible-Blade/194R-Fused-Non-Fused-Disconnect-Switches#specifications

Performance Data, Continued					12 A	16 A	20 A	25 A	32 A	40 A
IEC Applications, Continued										
AC-23A	Occasional switching of motors and other highly inductive loads (criterion for selecting main switches)	IEC-947 3-phase 3-pole	220…240V	[kW]	2.2	3	4.5	5.5	11	11
			380…440V	[kW]	4	5.5	7.5	11	18.5	22
			500V	[kW]	5.5	7.5	10	13	—	—
			660V	[kW]	5.5	7.5	8	11	22	22
		1-phase 2-pole	110V	[kW]	0.75	1.1	1.2	1.6	—	—
			220…240V	[kW]	1.3	2.2	2.5	3.2	5.5	5.5
			380…440V	[kW]	2.2	3.7	4.5	5.5	11	11
Short-circuit ratings										
	Rated short-time current (1s)			[kA_{rms}]	0.48	0.48	0.6	0.75	0.8	0.8
	Strongest series fuse, not in enclosure	(gL characteristic)		[A]	20★	20★	20★	25★	35	40
	Conditional rated short-circuit			[kA]	6	6	5	5	5	5
Switch Rate		electrical		[ops/h]	120	120	120	120	120	120
CSA and UL Applications										
Rated Voltage U_e				[V AC]	600	600	600	600	600	600
Ampere Rating	Pilot Duty	Contact class		[A]	A600	A600	—	—	—	—
	General Use	Non-inductive or slightly inductive load‡			12	16	20	25	32	40
Rated power P_e§		UL (CSA)			(FLA)	(FLA)	(FLA)	(FLA)		
Standard motor DOL rating (similar to AC-3)		3-phase 3-pole	120V	[Hp]	1 (7.2)	1.5 (12)	2 (13.6)	3 (19.2)	5 (30.4)	5 (30.4)
			240V	[Hp]	2 (6.8)	3 (9.6)	4 (12.4)	6 (18)	7.5 (22)	10 (28)
			480V	[Hp]	5 (7.6)	7.5 (11)	8 (11.6)	12 (17)	20 (27)	25 (34)
			600V	[Hp]	5 (6.1)	7.5 (9)	10 (11)	15 (17)	20 (22)	25 (27)
		1-phase 2-pole	120V	[Hp]	0.5 (9.8)	.75 (13.8)	1 (16)	1.5 (20)	2 (24)	2 (24)
			240V	[Hp]	1 (8.0)	1.5 (10.0)	2 (12)	3 (17)	5 (28)	5 (28)
			480V	[Hp]	2 (6.0)	3 (8.5)	4 (11.2)	6 (17)	7.5 (21)	10 (26)
			600V	[Hp]	3 (6.8)	3 (6.8)	5 (11.2)	7.5 (16)	10 (20)	15 (27)
Heavy motor load, reversing Rating (similar to AC-4)		3-phase 3-pole	120V	[Hp]	—	—	—	—		
			240V	[Hp]	—	—	—	—		
Max. back-up fuse		(gG characteristic)		[A]	35	55	60	80		
Short Circuit Ratings	Maximum Short Circuit Prospective Fault Current			[kA]	5	5	5	5		
	Maximum Fuse Size			[A]	35	55	60	80		
Switching Rate		electrical		[ops/h]	120	120	120	120	120	120

Mechanical Data

Performance Data			12/16 A	20/25 A	32/40 A
Protection class acc. to IEC 529	Handles		IP66	IP66	IP66
	Switch Bodies		IP20	IP20	IP20
Mechanical Endurance		[mil.ops]	1	1	1
Switching rate	mechanical	[ops/h]	1200	1200	1200
Maximum Wire Gauges					
	rigid wire	AWG	(2)18…12	(2)16…10	(2)12…8
		[mm^2]	(2)1…2.5	(2)1.5…6	(2)4…10
	fine strands	AWG	(2)18…12	(2)16…10	(2)14…10
		[mm^2]	(2)1…2.5	(2)1.5…4	(2)2.5…6

Environmental Data

Performance Data		12/16/20/25 A	32/40 A
Ambient temperature			
	Operation	-25…+60 °C (-13…+140 °F)	-25…+60 °C (-13…+140 °F)
	Storage	-40…+80 °C (-40…+176 °F)	-40…+80 °C (-40…+176 °F)

★ Does not apply to switches in enclosure.

‡ Suitable for switching off-load (AC-20) above 660V, but only up to 660V for switches with screws at the rear.

§ See standards compliance listed on http://ab.rockwellautomation.com/Circuit-and-Load-Protection/Disconnect-Switches/Non-Visible-Blade/194R-Fused-Non-Fused-Disconnect-Switches#specifications

Approximate Dimensions

Dimensions are shown in millimeters (inches). Dimensions are not intended to be used for manufacturing purposes.

Cat. No. 194L-C… for Central Fixing (194L-HC…)

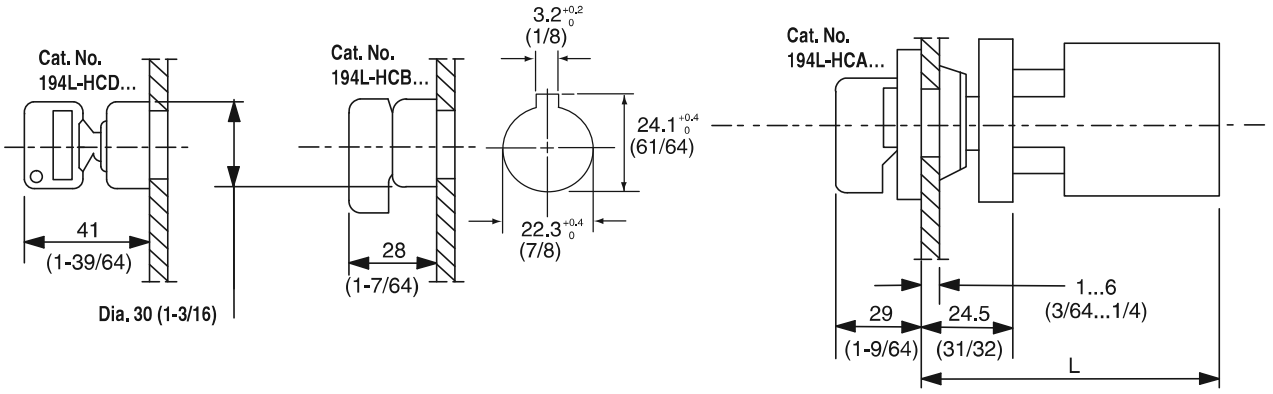

Cat. No.	L No. of Contacts 1…2	3…4	5…6	7…8	9…10
194L-C32/40...	86 (3-25/64)	103.5 (4-5/64)	121 (4-49/64)	138.5 (5-29/64)	156 (6-9/64)

Cat. No. 194L… for Front (Door) Installation

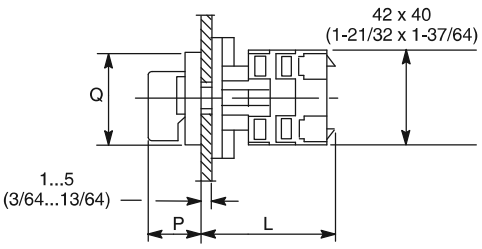

Cat. No. 194L-E 12/16…

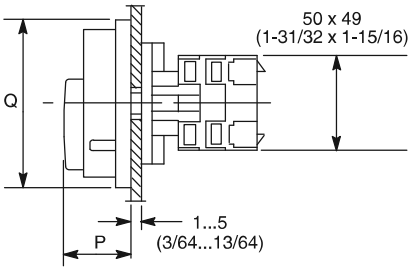

Cat. No. 194L-E 20/25…

Mounting Dimensions

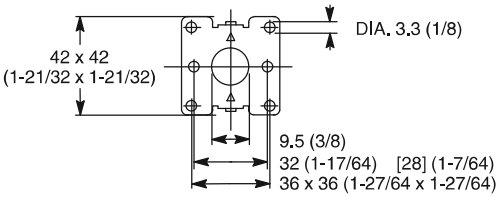

Cat. No. 194L-E 12/16…

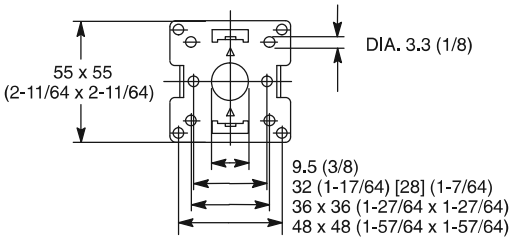

Cat. No. 194L-E 20/25…

Cat. No.	L No. of Contacts 1…2	3…4	5…6	7…8	9…10
194L-E12/16...	44 (1-47/64)	54 (2-1/8)	64 (2-33/64)	74 (2-29/32)	84 (3-5/16)
194L-E20/25...	44.5 (1-3/4)	57 (2-1/4)	69.5 (2-3/4)	82 (3-15/64)	94.5 (3-23/32)
194L-E32/40...	43 (1-11/16)	58.5 (2-5/16)	76 (2-63/64)	93.5 (3-11/16)	111 (4-3/8)

Control Knob

Cat. No.	P	Q
194L-HE4A...	28 (1-7/64)	48 (1-57/64) x 48 (1-57/64)
194L-HE4I...		
194L-HE4S...		48 (1-57/64) x 62 (2-7/16)
194L-HE6A...		64 (2-33/64) x 64 (2-33/64)
194L-HE6I...		
194L-HE6S...		64 (2-33/64) x 78 (3-5/64)
194L-HE6N...		67 (2-41/64) x 67 (2-41/64)
194L-HE6G...	34 (1-11/32)	

Dimensions are shown in millimeters (inches). Dimensions are not intended to be used for manufacturing purposes.

Cat. No. 194L-A… for Base/DIN Rail Installation

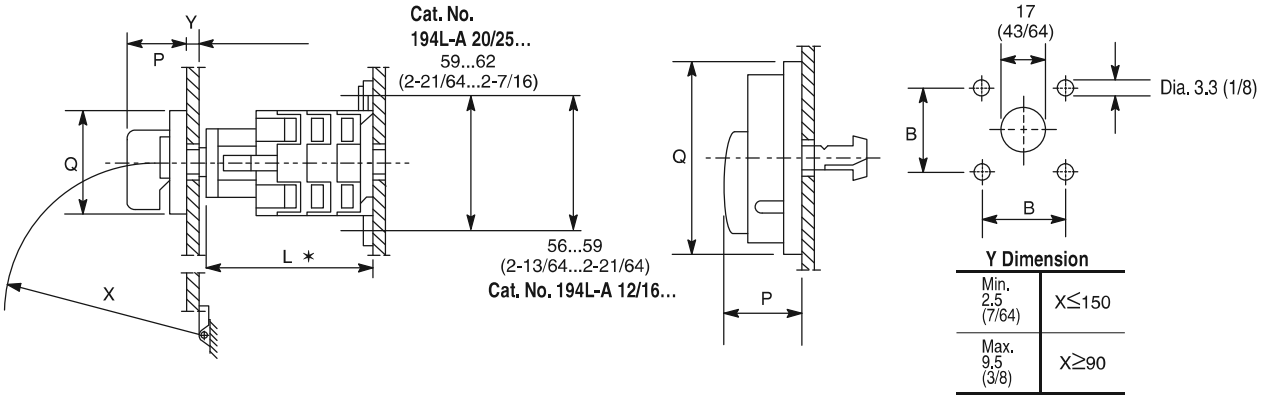

Cat. No.	L ✶ No. of Contacts 1…2	3…4	5…6	7…8
194L-A12/16...	58 (2-9/32)	68 (2-11/16)	78 (3-5/64)	88 (3-15/32)
194L-A20/25...	58 (2-9/32)	71.5 (2-13/16)	84 (3-5/16)	96.5 (3-51/64)
194L-A32/40...	67.5 (2-21/32)	85 (3-11/32)	102.5 (4-1/32)	120 (4-47/64)

Control Knob

Cat. No.	P	B	Q
194L-HE4A…	28 (1-7/64)	36 (1-27/64)	48 (1-57/64) x 48 (1-57/64)
194L-HE4I…			
194L-HE4S…			48 (1-57/64) x 62 (2-7/16)
194L-HE6A…		48 (1-57/64)	64 (2-33/64) x 64 (2-33/64)
194L-HE6I…			
194L-HE6S…			64 (2-33/64) x 78 (3-5/64)
194L-HE6N…	34 (1-11/32)		67 (2-41/64) x 67 (2-41/64)
194L-HE6G…			

✶ With DIN 46 277 (35) Rail + 2.5 mm (7/64)

Dimensions are shown in millimeters (inches). Dimensions are not intended to be used for manufacturing purposes.

Cat. No. 194L-A…** With Shaft Extension **Cat. No. 194L-G2853

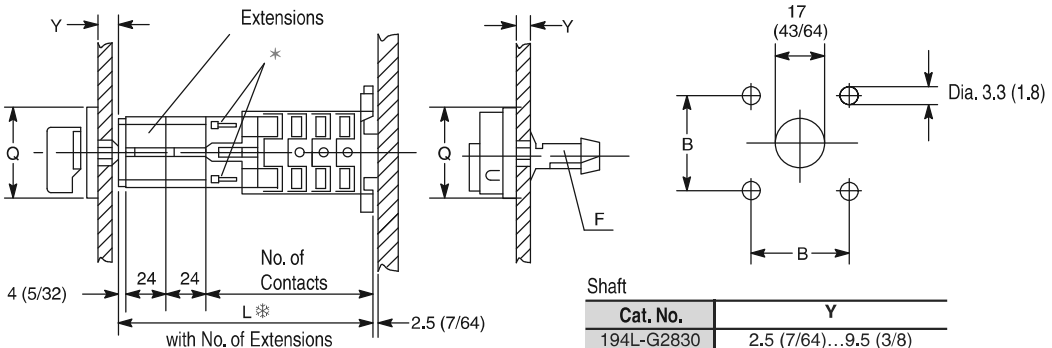

Shaft

Cat. No.	Y
194L-G2830	2.5 (7/64)…9.5 (3/8)
194L-G3194	9 (23/64)…18 (23/32)
194L-G3195	14 (35/64)…23 (29/32)

	Cat. No. 194L-A12/16... 10mm (0.39)				Cat. No. 194L-A20/25... 12.5mm (0.49)				Cat. No. 194L-A32/40			
	L											
	No. of Contacts											
No. of Extensions	1…2	3…4	5…6	7…8	1…2	3…4	5…6	7…8	1…2	3…4	5…6	7…8
With 1 extension	82 (3-15/64)	92 (3-5/8)	102 (4-1/64)	112 (4-13/32)	83 (3-17/64)	95.5 (3-49/64)	108 (4-1/4)	120.5 (4-3/4)	91.5 (3-15/64)	108 (4-1/4)	126.5 (5-63/64)	144 (6-43/64)
With 2 extensions	106 (4-11/64)	116 (4-37/64)	126 (4-31/32)	136 (5-23/64)	107 (4-7/32)	119.5 (4-45/64)	132 (5-13/64)	144.5 (5-11/16)	115.5 (5-35/64)	133 (5-15/64)	150.5 (6-5/16)	168 (7-5/8)
With 3 extensions	130 (5-1/8)	140 (5-33/64)	150 (5-29/32)	160 (6-19/64)	131 (5-5/32)	143.5 (5-21/32)	156 (6-9/64)	168.5 (6-5/8)	135.5 (5-11/32)	157 (6-3/16)	174.5 (7-7/8)	182 (8-9/16)
With 4 ★ extensions	154 (6-1/16)	164 (6-15/32)	174 (6-55/64)	184 (7-15/64)	155 (6-7/64)	167.5 (6-19/32)	180 (7-3/32)	192.5 (7-37/64)	163.5 (6-7/16)	181 (7-1/8)	198.5 (8-53/64)	216 (9-33/64)
With 5 ★ extensions	178 (7-1/64)	188 (7-13/32)	198 (7-51/64)	208 (8-3/16)	179 (7-3/64)	191.5 (7-35/64)	204 (8-1/32)	216.5 (8-33/64)	187.5 (7-3/8)	205 (8-5/64)	222.5 (9-49/64)	240 (9-29/64)
With 6 ★ extensions	202 (7-61/64)	212 (8-23/64)	222 (8-3/4)	232 (9-1/8)	203 (7-63/64)	215.5 (8-31/64)	228 (8-63/64)	240.5 (9-15/32)	211.5 (8-21/64)	229 (12)	246.5 (10-23/32)	264 (10-13/32)

Control Knob

Cat. No.	Q	B
194L-HE4A…	48 (1-57/64) x 48 (1-57/64)	36 (1-27/64)
194L-HE4I…		
194L-HE6A…	64 (2-33/64) x 64 (2-33/64)	48 (1-57/64)
194L-HE6I…		
194L-HE6N…	67 (2-41/64) x 67 (2-41/64)	
194L-HE6G…		

★ When more than four modules are used, attach the first one to the switch body using the screws supplied with the extension **(Cat. No. 194L-G2853)**.
‡ Mounting on DIN 46 277 (35) Rails.

Dimensions are shown in millimeters (inches). Dimensions are not intended to be used for manufacturing purposes.

Cat. No. 194L-A… With Metal Shafts

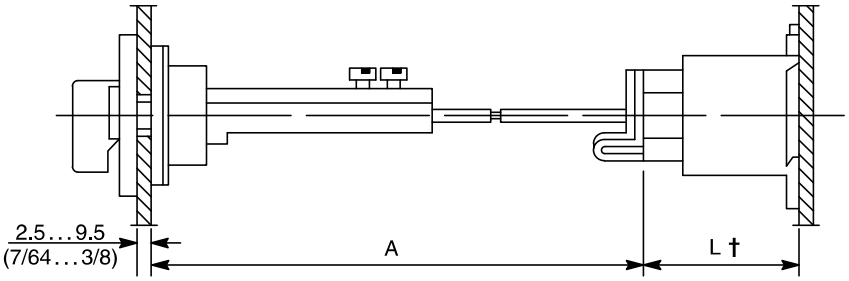

Cat. No.	A
194L-G3393…	110 (4-21/64)…235(9-1/4)
194L-G3394…	230 (9-1/16)…350 (13-25/32)

Cat. No.	L★ No. of Contacts 1…2	3…4	5…6	7…8
194L-A12/16...	54 (2-1/8)	64 (2-33/64)	74 (2-29/32)	84 (3-5/16)
194L-A20/25...	55 (2-11/64)	67.5 (2-21/32)	80 (3-5/32)	92.5 (3-41/64)
194L-A32/40...	63.5 (2-31/64)	81 (3-3/16)	88.5 (3-7/8)	116 (4-9/16)

No. of Extension Modules	Required End Shaft	Enclosure Mounting Depth§ Cat. No. 194L-A12/16…	Cat. No. 194L-A20/25…
0	44 (1-47/64) ♣	71.5…77.5 (2-13/16…3-1/16)	75…80.5 (2-61/64…3-11/64)
	52 (2-3/64)	77…87 (3-1/32…3-27/64)	80…90 (3-5/32…3-35/64)
	57 (2-1/4)	82…92 (3-15/64…3-5/8)	85…95 (3-11/32…3-3/4)
1	44 (1-47/64) ♣	95.5…101.5 (3-49/64…4)	99…105 (3-29/32…4-9/64)
	52 (2-3/64)	97.5…111 (3-27/32…4-3/8)	101…114.5 (3-63/64…4-33/64)
	57 (2-1/4)	102.5…116 (4-3/64…4-37/64)	106…119.5 (4-11/64…4-45/64)
2	44 (1-47/64) ♣	119.5…125.5 (4-45/64…4-61/64)	123…129 (4-27/32…5-5/64)
	52 (2-3/64)	121.5…135 (4-51/64…5-5/16)	125…138.5 (4-59/64…5-29/64)
	57 (2-1/4)	126.5…140 (4-63/64…5-33/64)	130…143.5 (5-1/8…5-21/32)
3	44 (1-47/64) ♣	143.5…149.5 (5-21/32…5-57/64)	147…153 (5-51/64…6-1/32)
	52 (2-3/64)	145.5…159 (5-47/64…6-17/64)	149…162.5 (5-7/8…6-13/32)
	57 (2-1/4)	150.5…164 (5-15/16…6-15/32)	154…167.5 (6-1/16…6-19/32)
4	44 (1-47/64) ♣	167.5…173.5 (6-19/32…6-27/32)	171…177 (6-47/64…6-31/32)
	52 (2-3/64)	169.5…183 (6-43/64…7-13/64)	173…186.5 (6-13/16…7-11/32)
	57 (2-1/4)	174.5…188 (6-7/8…7-13/32)	178…191.5 (7-1/64…7-35/64)
5	44 (1-47/64) ♣	191.5…197.5 (7-35/64…7-25/32)	195…201 (7-43/64…7-59/64)
	52 (2-3/64)	193.5…207 (7-5/8…8-5/32)	197…210.5 (7-49/64…8-19/64)
	57 (2-1/4)	198.5…212 (7-53/64…8-23/64)	202…215.5 (7-61/64…8-31/64)
6	44 (1-47/64) ♣	215.5…221.5 (8-31/64…8-23/32)	219…225 (8-5/8…8-55/64)
	52 (2-3/64)	217.5…231 (8-37/64…9-3/32)	221…234.5 (8-45/64…9-15/64)
	57 (2-1/4)	222.5…236 (8-49/64…9-19/64)	226…239.5 (8-29/32…9-7/16)

★ When more than 4 modules are used, attach the first one to the switch body using the screws supplied with the extension **(Cat. No. 194L-G2853)**.

§ For DIN Rail-mounted devices, remember to deduct the offset distance provided by the rail. For example, deduct 2.5 mm (7/64 in.) from the mounting depth for Bulletin 194L switch body mounted on DIN 46277 rail.

♣ One 44 mm (1-47/64 in) end shaft is supplied with all Bulletin 194L Switch Bodies.

Modular Shaft Extensions (Cat. No. 194L-G2853)

Select No. of Extension Modules and Shaft for use with enclosures.

Dimensions are shown in millimeters (inches). Dimensions are not intended to be used for manufacturing purposes.

Cat. No. 194L-A... *With* ***Cat. No. 194L-HE4P-...***

Installation on DIN 46277 (35 mm) Rails + 2.5 mm (7/64 in.)

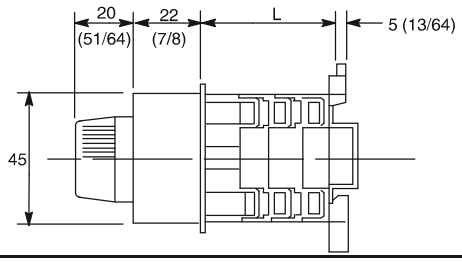

Cat. No.	L			
	No. of Contacts			
	1...2	3...4	5...6	7...8
194L-A12/16...	35 (1-3/8)	45 (1-49/64)	55 (2-11/64)	65 (2-9/16)
194L-A20/25...	33.5 (1-21/64)	48 (1-57/64)	60.5 (2-3/8)	73 (2-7/8)
194L-A32/40...	43 (1-11/16)	61 (2-13/32)	79 (3-7/64)	97 (3-53/64)

Cat. No. 194L-E... *With Terminal Cover*

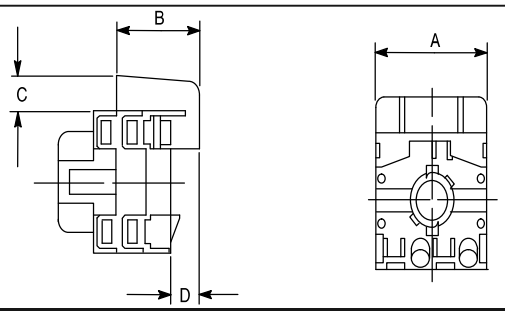

Cat. No.	A	B	C	D
194L-E12/16...	40 (1-37/64)	42.5 (1-43/64)	12 (15/32)	2.5 (7/64)
194L-E20/25...	49 (1-15/16)	37.5 (1-31/64)	12 (15/32)	2.5 (7/64)
194L-E32/40...	59 (2-21/64)	50 (1-31/32)	15 (19/32)	2.5 (7/64)

Cat. No. 194L-A... *With Terminal Cover*

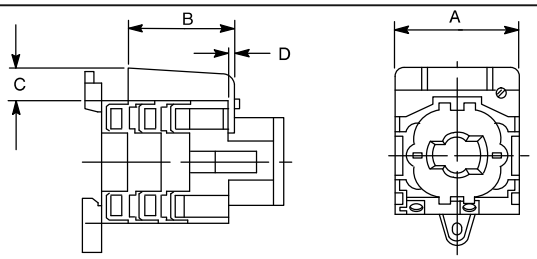

Cat. No.	A	B	C	D
194L-A12/16...	40 (1-37/64)	42.5 (1-43/64)	12 (15/32)	2.5 (7/64)
194L-A20/25...	49 (1-15/16)	37.5 (1-31/64)	12 (15/32)	2.5 (7/64)
194L-A32/40...	63.5 (2-1/2)	49 (1-53/64)	12 (15/32)	2 (5/64)

Dimensions are shown in millimeters (inches). Dimensions are not intended to be used for manufacturing purposes.

Enclosure

Cat. No. 194L-G3572...Cat. No. 194L-G3579

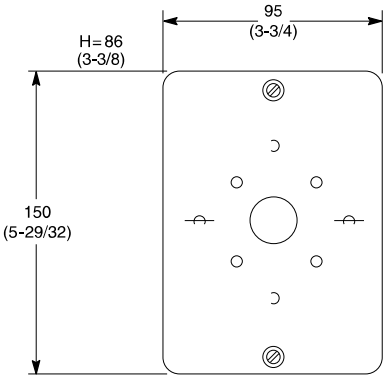

Cat. No. 194L-G3572/G3576 G3574/G3578

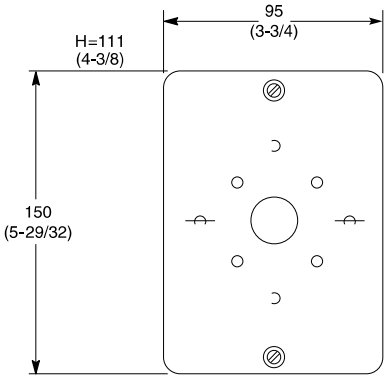

Cat. No. 194L-G3573/G3577 G3575/G3579